KOUNIS GROUP SINCE 1953

ABN 43 008 701 335

SECTION 7

K-Strut Support Systems

AUSTRALIA WIDE AUSTRALIAN MADE

Quality Endorsed Company ISO9001 Lic No 13146

EDITION 2

SECTION 7: K-Strut Support Systems

K-1000 Channel

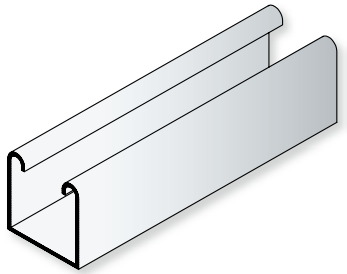

> 7:3

K-2000 Channel

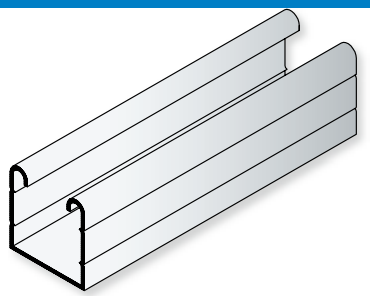

> 7:4

K-3300 Channel

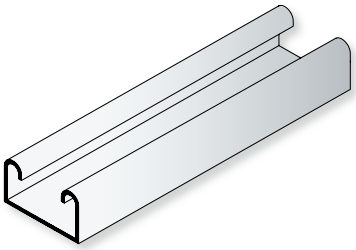

> 7:5

K-4000 Channel

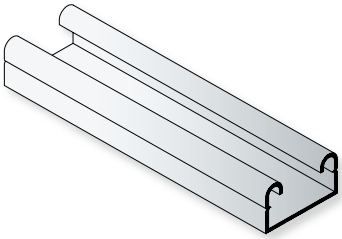

> 7:6

K-5500 Channel

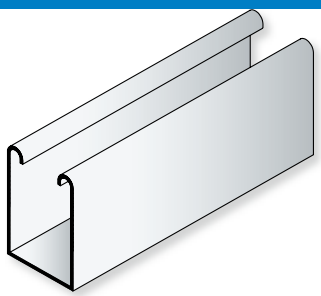

> 7:7

Concrete Insert Channel

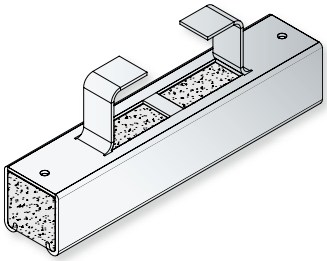

> 7:8

Cantilever Brackets

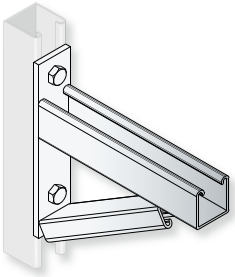

> 7:10

Pipe Cable & Conduit Clamps

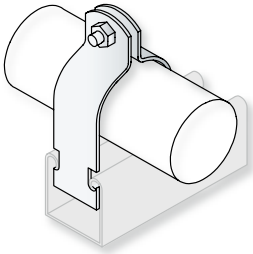

> 7:11

K-Strut Fittings

Column Support Applications > 7:12	Hanger Support Applications > 7:13	Channel Carriages Angle Fittings > 7:14
90° Fittings > 7:15	Flat Fittings “U” & “Z” Fittings > 7:16	Winged Shape Fittings / Lighting Supports > 7:17
Joiner Boxes / PVC Accessories > 7:18	Adaptable Beam Clamps / Pipe Clamps > 7:19	Support / Hangers > 7:20
HDG Mild Steel Products > 7:21	Channel Nuts / Stud Nuts > 7:22	Fasteners > 7:23-24
Weight Tables > 7:25-26	Alpha Numeric Listing > 7:27-28	Key Word Index > 7:29

E.&O.E.

K-Strut Support Systems

General Description

The Kounis Group K-Strut Support Systems were designed as a site adaptable mechanical support method; this product range complements almost any installation of Cable, Pipe, HVAC or general support structure.

The key to making any installation easy and ensuring performance of the final product is to ensure selection of the correct parts and finishes; below is some key information you may require to assist selection:

Product Finishes

Mild Steel post production ***Hot Dip Galvanised*** surface treatment to AS/NZS1365, AS1594 and AS/NZS4680
316 Grade ***Stainless Steel***
Mild Steel post production ***Zinc Plated*** surface treatment to AS1789
Mild Steel ***Mill Finish*** NO surface treatment

Painted finish available on request.

Load Ratings

Allowable loading for the K-Strut product range is listed in tables located on the relating product page. All published slip out, pull out and load ratings have been derived by calculation based on ultimate load capacity prior to product failure taking into account a safety factor of 1.5.

K-Strut channel is typically used in either a support beam or support column arrangement.

Support Beam technical data lists maximum allowable uniform load and mid span deflection at a range of spans. Together with this data we have designated a loading to span which will give a deflection ratio of 1/200 of the span. This will give a recognized practical beam deflection to minimize sagging of the beam under load.

Support Column technical data lists maximum lateral loading at a range on unbraced heights.

Product Weights

All itemised product weights are located under the alpha numeric listing at the back section of this catalogue.

K1000 Series Channel

- 6 m length
- K1000 series channel is manufactured from 2.5 mm Steel or 2.0 mm 316 Grade Stainless Steel
- Slotted option available
- Special cut to length sizes available on request
- Welded combination channel available on request
- Painted finish available on request

K1000

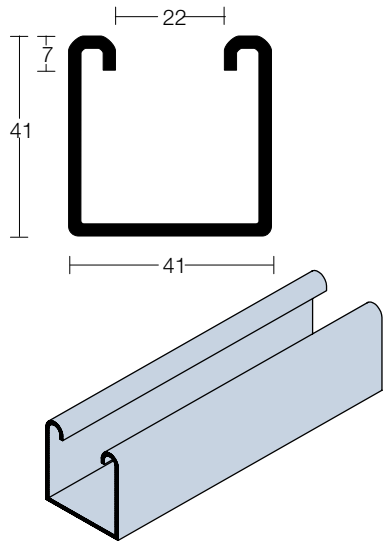

K1001

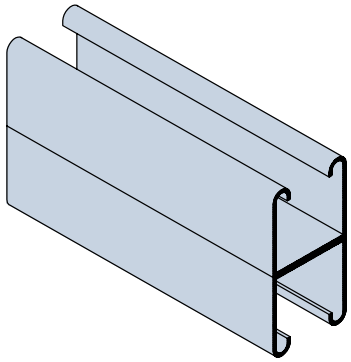

K1000T

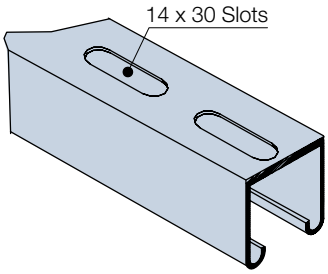

AVAILABLE FINISH	
SUFFIX	**DESCRIPTION**
H	Hot Dip Galvanised
G	Galvabond
S	316 Stainless Steel
Z	Zinc Passivated
M	Mild Steel Mill Finish
P	Painted

TECHNICAL DETAILS K1000			MASS 2.6 kg/m											
DATA	**SPAN (mm)**		**600**	**750**	**1000**	**1500**	**2000**	**2500**	**3000**	**3500**	**4000**	**4500**	**5000**	**6000**
BEAM LOADING	Max Allowed Uniform Load kN	K1000	7.5	6.0	4.5	3.0	2.2	1.8	1.5	1.3	1.1	1.0	0.9	0.7
		K1001	13.3	13.3	12.7	8.5	6.4	5.1	4.2	3.6	3.2	2.8	2.5	2.1
	Deflection at Uniform Load mm	K1000	1.0	2.0	4.0	9.0	15.0	24.0	34.0	47.0	60.0	78.0	96.0	
		K1001	0	1.0	2.0	5.0	9.0	13.0	19.0	26.0	35.0	43.0	53.0	77.0
	Uniform Load at Span/200 Deflection kN	K1000	7.5	6.0	4.5	2.6	1.5	0.9	0.7	0.5	0.4	0.3	0.2	0.2
		K1001	13.3	13.3	12.7	8.5	6.4	4.7	3.3	2.4	1.8	1.5	1.2	0.8
The allowable loads shown are derived from dividing the ultimate calculated load values by a 1.5 Factor of Safety														
DATA	**UNBRACED HEIGHT (mm)**		**600**	**750**	**1000**	**1250**	**1500**	**1750**	**2000**	**2500**	**2750**			
COLUMN LOADING	Max Allowed Lateral Load kN	K1000	15.5	14.6	13.1	11.5	10.2	9.2	8.4	7.0	6.5			
		K1001	28.9	28.5	27.8	27.0	25.9	24.7	23.4	20.0	18.2			

E.&O.E.

K2000 Series Channel

- 6 m length
- K2000 series channel is manufactured from 1.6 mm Steel
- Slotted option available
- Special cut to length sizes available on request
- Welded combination channel available on request
- Painted finish available on request

K2000

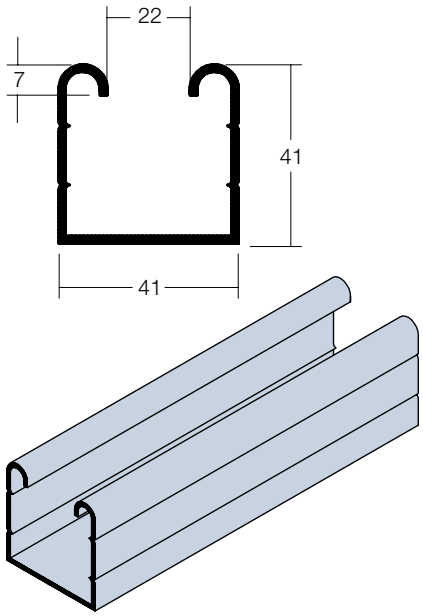

K2001

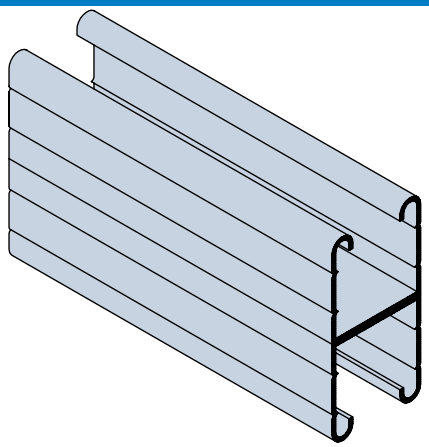

K2000T

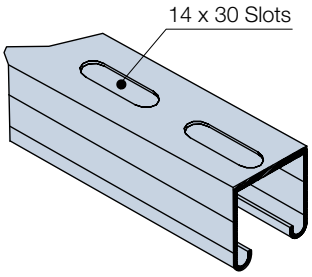

AVAILABLE FINISH	
SUFFIX	DESCRIPTION
H	Hot Dip Galvanised
G	Galvabond
S	316 Stainless Steel
Z	Zinc Passivated
M	Mild Steel Mill Finish
P	Painted

The allowable loads shown are derived from dividing the ultimate calculated load values by a 1.5 Factor of Safety

TECHNICAL DETAILS K2000			MASS 1.8 kg/m											
DATA	SPAN (mm)		600	750	1000	1500	2000	2500	3000	3500	4000	4500	5000	6000
BEAM LOADING	Max Allowed Uniform Load kN	K2000	4.5	3.6	2.7	1.8	1.3	1.1	0.9	0.8	0.7	0.6	0..5	0.4
		K2001	8.0	8.0	7.6	5.1	3.8	3.1	2.5	2.2	1.9	1.7	1.5	1.3
	Deflection at Uniform Load mm	K2000	1.0	2.0	4.0	9.0	15.0	24.0	34.0	47.0	60.0	78.0	96.0	129.0
		K2001	0	1.0	2.0	5.0	9.0	13.0	19.0	26.0	35.0	43.0	53.0	77.0
	Uniform Load at Span/200 deflection kN	K2000	4.5	3.6	2.7	1.6	0.9	0.5	0.4	0.3	0.2	0.2	.1	.1
		K2001	8.0	8.0	7.6	5.1	3.8	2.8	2.0	1.4	1.1	0.9	0.7	0.5

E.&O.E.

K3300 Series Channel

- 6 m length
- K3300 series channel is manufactured from 2.5 mm Steel or 2.0 mm 316 Grade Stainless Steel
- Slotted option available
- Special cut to length sizes available on request
- Welded combination channel available on request
- Painted finish available on request

K3300

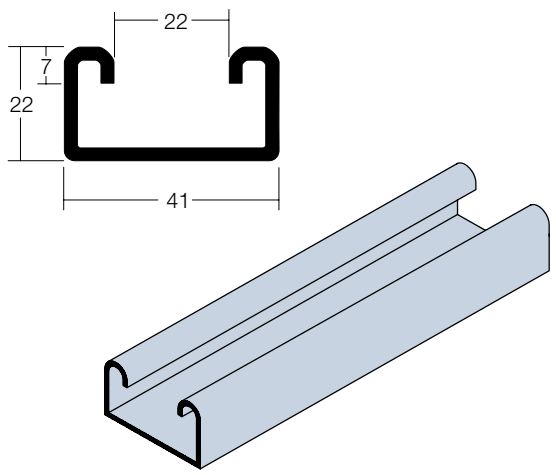

K3301

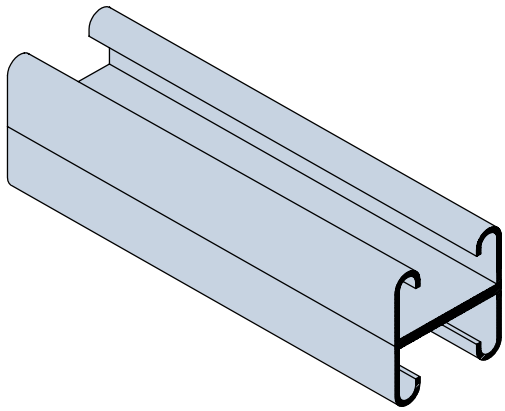

K3300T

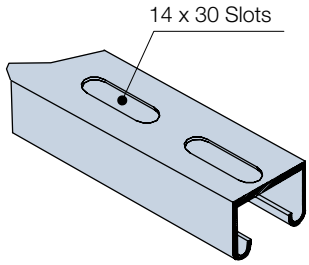

AVAILABLE FINISH	
SUFFIX	**DESCRIPTION**
H	Hot Dip Galvanised
G	Galvabond
S	316 Stainless Steel
Z	Zinc Passivated
M	Mild Steel Mill Finish
P	Painted

TECHNICAL DETAILS K3300			MASS 1.9 kg/m											
DATA	**SPAN (mm)**		**600**	**750**	**1000**	**1500**	**2000**	**2500**	**3000**	**3500**	**4000**	**4500**	**5000**	**6000**
BEAM LOADING	Max Allowed Uniform Load kN	K3300	2.7	2.2	1.6	1.1	0.8	0.6	0.5	0.5	0.4	0.4	0.3	0.3
		K3301	7.5	6.0	4.5	3.0	2.3	1.8	1.5	1.3	1.1	1.0	0.9	0.8
	Deflection at Uniform Load mm	K3300	2.0	4.0	7.0	16.0	27.0	39.0	57.0	90.0	107.0	153.0	157.0	272.0
		K3301	1.0	2.0	4.0	9.0	16.0	25.0	36.0	49.0	62.0	81.0	100.0	153.0
	Uniform Load at Span/200 deflection kN	K3300	2.7	2.1	1.2	0.5	0.3	0.2	0.1	0.1	0.1	0.1	-	-
		K3301	7.5	6.0	4.5	2.0	1.4	0.9	0.6	0.5	0.4	0.3	0.2	-
The allowable loads shown are derived from dividing the ultimate calculated load values by a 1.5 Factor of Safety														
DATA	**UNBRACED HEIGHT (mm)**		**600**	**750**	**1000**	**1250**	**1500**	**1750**	**2000**	**2500**	**2750**			
COLUMN LOADING	Max Allowed Lateral Load kN	K3300	9.6	8.9	7.7	6.2	5.0	4.1	-	-	-			
		K3301	18.7	18.1	16.9	15.6	14.1	12.5	10.9	8.5	7.5			

E.&O.E.

K4000 Series Channel

- 6 m length
- K4000 series channel is manufactured from 1.6 mm Steel
- Slotted option available
- Special cut to length sizes available on request
- Welded combination channel available on request
- Painted finish available on request

K4000

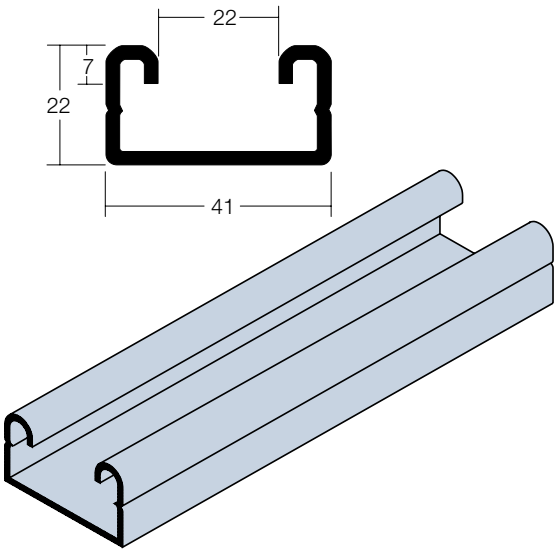

K4001

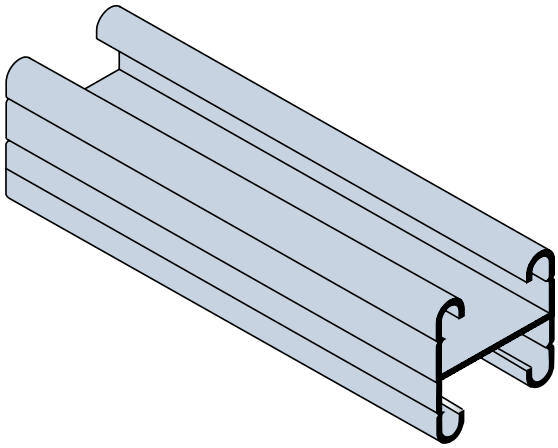

K4000T

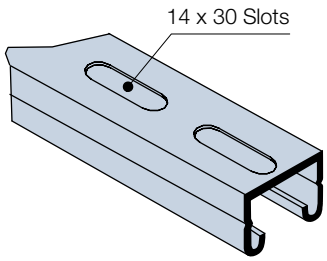

AVAILABLE FINISH	
SUFFIX	**DESCRIPTION**
H	Hot Dip Galvanised
G	Galvabond
S	316 Stainless Steel
Z	Zinc Passivated
M	Mild Steel Mill Finish
P	Painted

The allowable loads shown are derived from dividing the ultimate calculated load values by a 1.5 Factor of Safety.

TECHNICAL DETAILS K4000			MASS 1.3 kg/m											
DATA	**SPAN (mm)**		**600**	**750**	**1000**	**1500**	**2000**	**2500**	**3000**	**3500**	**4000**	**4500**	**5000**	**6000**
BEAM LOADING	Max Allowed Uniform Load kN	K4000	1.6	1.3	1.0	0.7	0.5	0.4	0.3	0.3	0.2	0.2	0.2	0.2
		K4001	4.5	3.6	2.7	1.8	1.4	1.1	0.9	0.8	0.7	0.6	0.5	0.5
	Deflection at Uniform Load mm	K4000	2.0	4.0	7.0	16.0	27.0	39.0	57.0	90.0	107.0	153.0	157.0	272.0
		K4001	1.0	2.0	4.0	9.0	16.0	25.0	36.0	49.0	62.0	81.0	100.0	153.0
	Uniform Load at Span/200 deflection kN	K4000	1.6	1.3	0.7	0.3	0.2	0.1	0.1	-	-	-	-	-
		K4001	4.5	3.6	2.7	1.2	0.8	0.5	0.4	0.3	0.2	0.2	0.1	-

E.&O.E.

K5500 Series Channel

- 6 m length
- K5500 series channel is manufactured from 2.5 mm Steel or 2.0 mm 316 Grade Stainless Steel
- Slotted option available
- Special cut to length sizes available on request
- Welded combination channel available on request
- Painted finish available on request

K5500

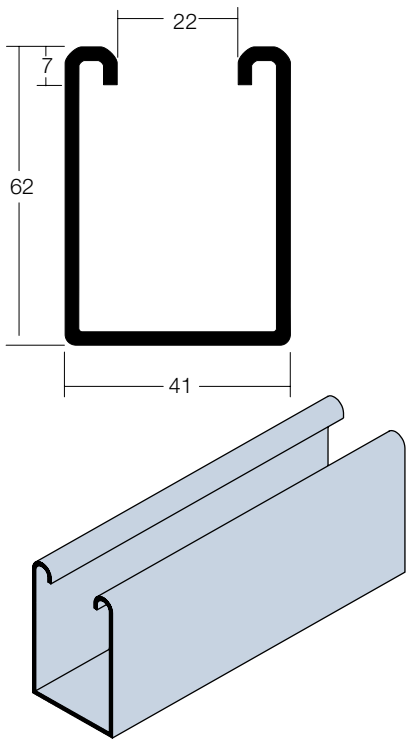

K5501

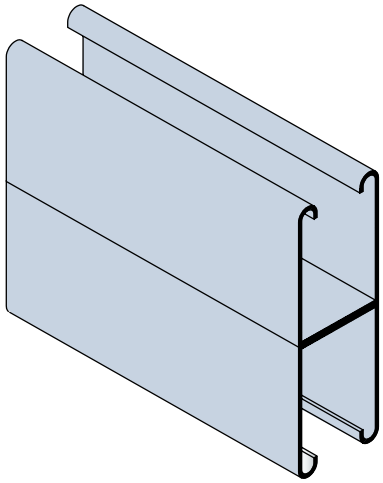

K5500T

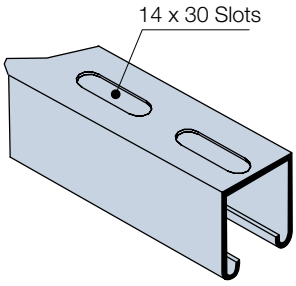

AVAILABLE FINISH	
SUFFIX	**DESCRIPTION**
H	Hot Dip Galvanised
G	Galvabond
Z	Zinc Passivated
M	Mild Steel Mill Finish
P	Painted

When Ordering add suffix to end of product code

The allowable loads shown are derived from dividing the ultimate calculated load values by a 1.5 Factor of Safety.

TECHNICAL DETAILS K5500			MASS 3.4 kg/m											
DATA	**SPAN (mm)**		**600**	**750**	**1000**	**1500**	**2000**	**2500**	**3000**	**3500**	**4000**	**4500**	**5000**	**6000**
BEAM LOADING	Max Allowed Uniform Load kN	K5500	14.3	11.4	8.6	5.7	4.3	3.4	2.9	2.4	2.1	1.9	1.7	1.4
		K5501	19.5	19.5	17.3	11.5	8.6	6.9	5.8	4.9	4.3	3.8	3.5	2.9
	Deflection at Uniform Load mm	K5500	1.0	1.0	3.0	6.0	11.0	16.0	24.0	32.0	41.0	53.0	65.0	93.0
		K5501	0	0	1.0	2.0	4.0	6.0	9.0	12.0	16.0	20.0	25.0	36.0
	Uniform Load at Span/200 deflection kN	K5500	14.3	11.4	8.6	5.7	4.1	2.6	1.8	1.3	1.0	0.8	0.7	0.5
		K5501	19.5	19.5	17.3	11.5	8.6	6.9	5.8	4.9	4.3	3.8	3.5	2.4

E.&O.E.

Concrete Insert Channel

- 6 m length
- CI series channel is manufactured from 2.5 mm Mild Steel with post production Hot Dip Galvanised Surface Treatment
- Pressed lugs at 200 mm continuous centres
- Removable foam insert
- Testing is based on a minimum 300 mm section cast in 25 Mpa (average) concrete. Maximum load before pull out failure is 9.3 kN based on a safety factor of 3
- Special cut to length sizes available on request

K1000CIH

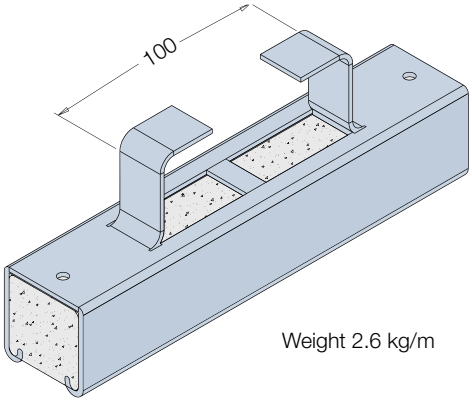

Weight 2.6 kg/m

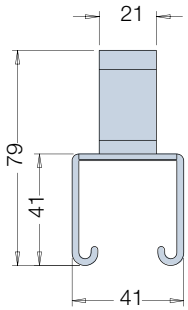

FINISH: Hot Dipped Galvanised only

K3300CIH

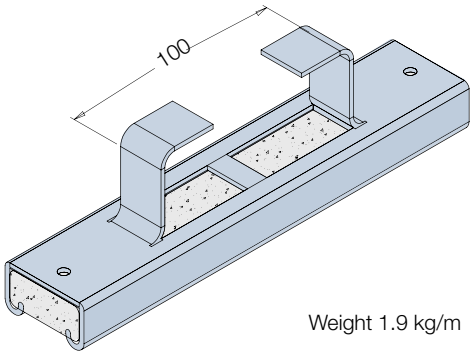

Weight 1.9 kg/m

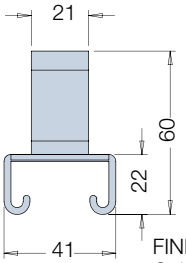

FINISH: Hot Dipped Galvanised only

Joining Plate

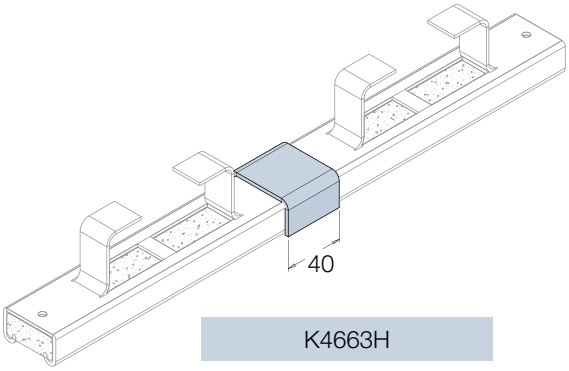

K4663H

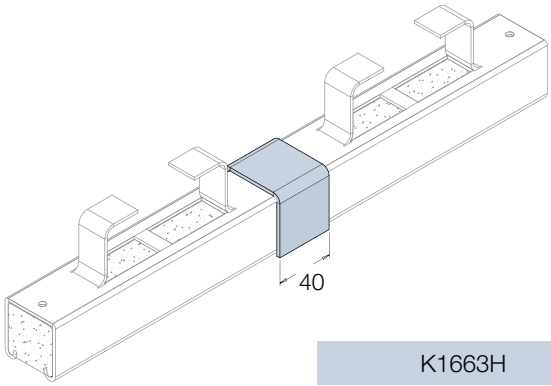

K1663H

FINISH: Hot Dipped Galvanised only

E.&O.E.

Channel Loading Factors

Technical details by K-Strut series are based on a uniform load taking into account a safety factory of 1.5. Below conversion factors for beams are designed to help ascertain the correct series for the desired application.

As an example;

K-Strut Series K1000 Channel in a uniform load over a 600 mm span has a max allowable load of 7.5 kN resulting in a 1 mm deflection at full load.

Scenario K1000G over 600 mm span with central concentrated load

Uniform load **7.5 kN x 0.50** central concentrated load factor = **3.75 kN**

Uniform deflection at full load **1 mm x 0.80** central concentrated deflection factor = **0.8 mm**

Conversion Factors for Beams with Various Static Loading Conditions

LOAD AND SUPPORT CONDITION		LOAD FACTOR	DEFLECTION FACTOR
1. Simple Beam, Uniform Load	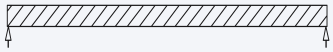	1.00	1.00
2. Simple Beam, Concentrated Load at Centre	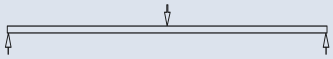	0.50	0.80
3. Simple Beam, Two Equal Concentrated Loads at 1/4 pts		1.00	1.10
4. Beam Fixed at Both Ends, Uniform Load	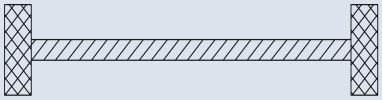	1.50	0.30
5. Beam Fixed at Both Ends, Concentrated Load at Centre	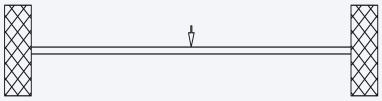	1.00	0.40
6. Cantilever Beam, Uniform Load	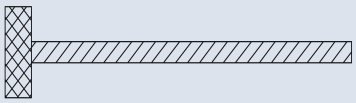	0.25	2.40
7. Cantilever Beam, Concentrated Load at End		0.12	3.20
8. Continuous Beam, Two Equal Spans, Uniform Load on Both Ends	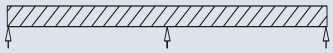	1.00	0.42

E.&O.E.

Cantilever Brackets

Flat Plate Double Strut Bracket

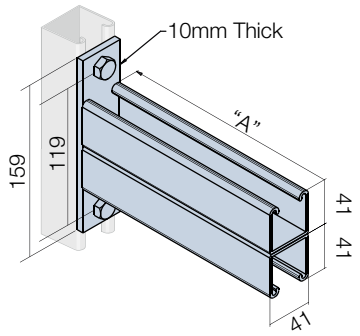

CODE	A	UNIFORM DESIGN LOAD kN
K2542	350	3.7
K2543	497	1.9
K2544	663	1.5
K2545	762	1.1
K2546	914	1.0

Flat Plate Bracket

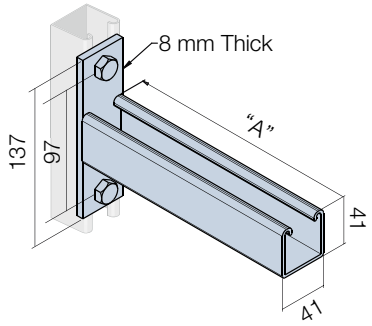

CODE	A	UNIFORM DESIGN LOAD kN
K2513F	204	3.7
K2514F	350	1.9
K2515F	497	1.5
K2516F	663	1.1
K2517F	780	1.0

Tray Arm Bracket

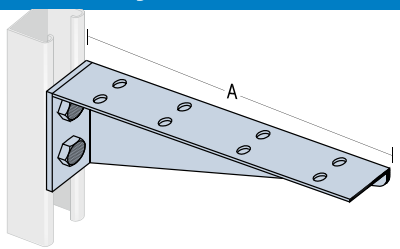

CODE	A	UNIFORM DESIGN LOAD kN
K2491	152	1.55
K2492	203	1.5
K2493	254	1.4
K2494	305	1.35
K2495	356	1.25
K2497	457	1.0
K2500	610	0.95

Also available in Galvabond when ordering add suffix G

Braced Cantilever Bracket

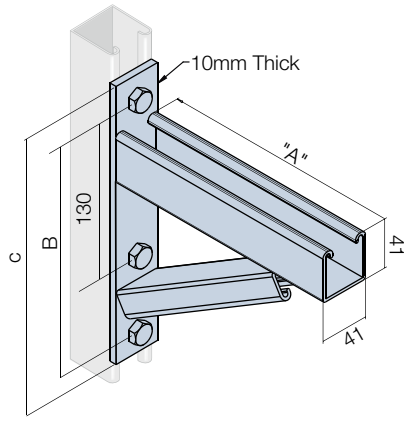

CODE	A	B	C	UNIFORM DESIGN LOAD kN
K2514B	350	190	230	4.35
K2515B	497	190	230	3.05
K2516B	663	220	260	3.20
K2517B	780	220	260	2.75

K1000 Channel Support Bracket

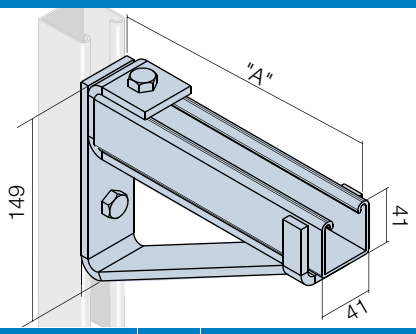

CODE	A	UNIFORM DESIGN LOAD kN
K1075	121	0.57
K1075A	197	0.57

Note: To be used to support K1000, K2000 and K4001.
Loading applies to bracket only and not strut strength.

AVAILABLE FINISH	
SUFFIX	DESCRIPTION
H	Hot Dip Galvanised
S	316 Stainless Steel

When Ordering add suffix to end of product code

Mounting plates have 14 mm diameter holes.

Note: Kounis Braced brackets are longer than other suppliers, and also 900 size (1.5 kN) brackets are available to firm order.

E.&O.E.

Pipe, Cable & Conduit Clamps

Pipe, Cable & Conduit Clamps

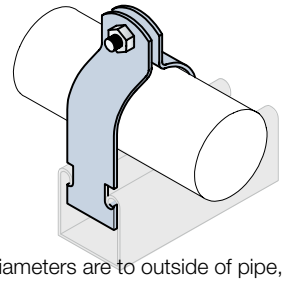

NOTE: Diameters are to outside of pipe, cable or insulation. Clamps are supplied with Pan Head screws and nuts.

CODE	FIT DIA.	CODE	FIT DIA.	CODE	FIT DIA.
K5-8	8 mm	K5-51	51	K5-117	117 mm
K5-10	10 mm	K5-54	54	K5-121	121 mm
K5-12	12 mm	K5-57	57	K5-127	127 mm
K5-16	16 mm	K5-60	60	K5-133	133 mm
K5-18	18 mm	K5-64	64	K5-139	139 mm
K5-20	20 mm	K5-67	67	K5-146	146 mm
K5-21	21 mm	K5-70	70	K5-152	152 mm
K5-22	22 mm	K5-76	76	K5-159	159 mm
K5-25	25 mm	K5-79	79	K5-165	165 mm
K5-27	27 mm	K5-83	83	K5-178	178 mm
K5-29	29 mm	K5-86	86	K5-191	191 mm
K5-32	32 mm	K5-89	89	K5-203	203 mm
K5-34	34 mm	K5-92	92	K5-219	219 mm
K5-35	35 mm	K5-95	95	K5-230	230 mm
K5-38	38 mm	K5-98	98	K5-241	241 mm
K5-42	42 mm	K5-102	102	K5-254	254 mm
K5-43	43 mm	K5-105	105	K5-305	305 mm
K5-44	44 mm	K5-108	108	K5-315	315 mm
K5-48	48 mm	K5-111	111	K5-324	324 mm
K5-49	49 mm	K5-114	114		

Insulation Barrier

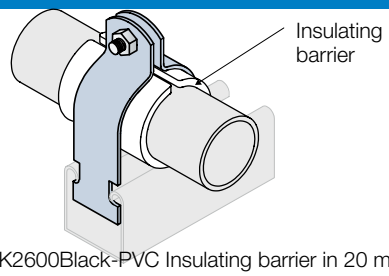

K2600Black-PVC Insulating barrier in 20 m rolls
K2600White-'Supacushion' barrier in 5 m Rolls

Single Bolt Strut Clamp

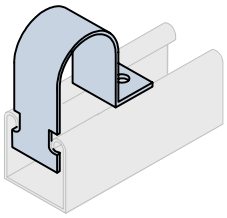

Setscrew and Strut nut ordered separately

CODE	FIT DIA.
K1600-34	34 mm
K1600-43	43 mm
K1600-48	48 mm
K1600-60	60 mm
K1600-76	76 mm
K1600-89	89 mm
K1600-102	102 mm
K1600-114	114 mm
K1600-152	152 mm
K1600-165	165 mm

AVAILABLE FINISH	
SUFFIX	DESCRIPTION
H	Hot Dip Galvanised
Z	Zinc Passivated
S	316 Stainless Steel

When Ordering add suffix to end of product code

Adjustable Saddle Clamp

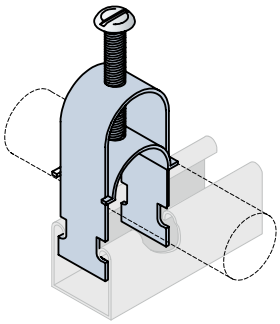

CODE	FIT DIA.
K5026-1	13 mm
K5028-1	19 mm
K5030-1	25 mm
K5032-1	32 mm
K5034-1	38 mm
K5036-1	44 mm
K5038-1	51 mm
K5040-1	57 mm
K5042-1	64 mm
K5044-1	70 mm
K5046-1	76 mm

AVAILABLE FINISH	
SUFFIX	DESCRIPTION
H	Hot Dip Galvanised
Z	Zinc Passivated

When Ordering add suffix to end of product code

E.&O.E.

K-Strut Fittings

Column Support Applications

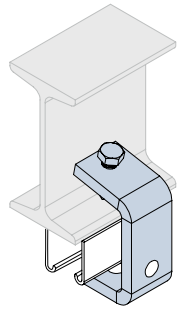

K1271

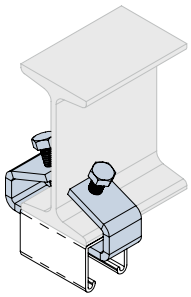

K1272

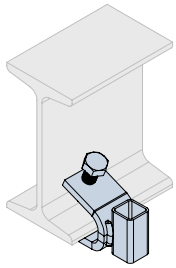

K1272A

M12 x 40 hex head screw and channel nut ordered separately

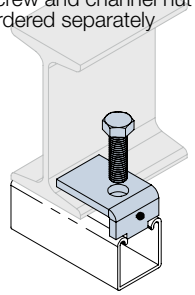

K1386

K1796 use with K1000 and K2000

K1796A use with K3300 and K4000

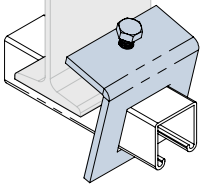

K1796 & K1796A

Use with K1000, K2000, K3300 and K4000

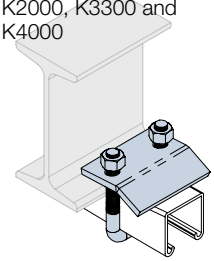

K2785

Use with K1001, K2001 and K5500

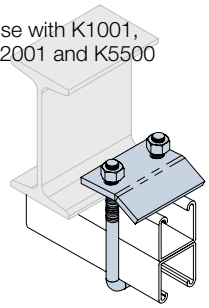

K2786

TYPE K3087 – use with K1000 and K2000. K3088 – use with K3300 and K4000. Strut channel not included.

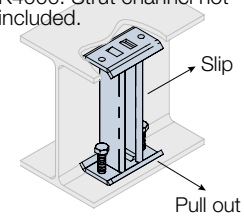

Hot Dip Galvanised only

K3087 & K3088

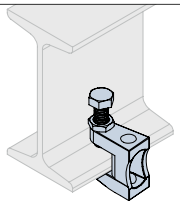

Malleable Iron Clamp
Zinc Plated only

KBC08 - M8

KBC10 - M10

KBC12 - M12

Use K3679 swivel nut or K3683 clevis hanger for angle adjustment

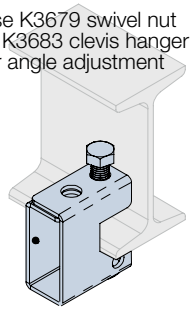

K3676

BEAM CLAMP SAFE LOADING		
CODE	SAFE LOAD kN	NOTES
K1271	4.4	Per pair
K1272	4.0	Per pair
K1272A	0.4	each
K1273	1.0	M10 only
K1386	5.4 K1000/3.9 K2000	Per pair
K1796	4.2	Per pair
K1796A	4.2	Per pair
K2785	8.8	Per pair
K2786	8.8	Per pair
K3676	2.9	M10
K3683	1.1	Use with K3676
KBC08	1.8	Mal / Iron
KBC10	2.2	Mal / Iron
KBC12	3.1	Mal / Iron

Use with K3676.
M10 x 50 screw, nut & lock washer included

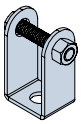

K3683

Swivel Nut

CODE	SIZE
K367910Z	M10
K367912Z	M12

Zinc Plated Only

K3679

CODE	USED WITH	PULL OUT	SLIP
K3087	With K1000	450 kg	360 kg
K3087	With K2000	215 kg	135 kg
K3088	With K3300	450 kg	360 kg

End plates include Cone point screws only. Strut Channel is not included.

AVAILABLE FINISH	
SUFFIX	DESCRIPTION
H	Hot Dip Galvanised
S	316 Stainless Steel

When Ordering add suffix to end of product code

NOTES: Material thickness 6mm hole diameter 14 mm
Channel nuts and bolts order seperately

E.&O.E.

K-Strut Fittings

Hanger Support Applications

FINISH: Zinc Plated only

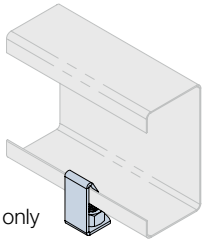

CODE	THREAD SIZE	WORKING LOAD (kg)
KPC08Z	M08	95
KPC10Z	M10	102
KPC12Z	M12	108

FINISH: Zinc Plated only

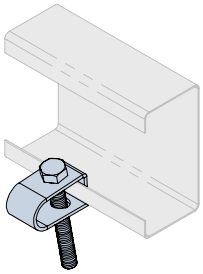

CODE	THREAD SIZE	WORKING LOAD (kg)
K1273Z	M10	40

Central Female Hanger

FINISH: Zinc Plated only

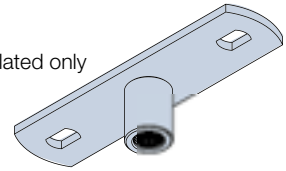

CODE	THREAD SIZE	WORKING LOAD (kg)
K1200AZ10	M10	320
K1200AZ12	M12	480

Verticle Mounting Plate

FINISH: Zinc Plated only

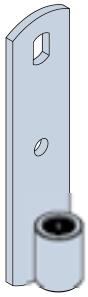

CODE	THREAD SIZE	WORKING LOAD (kg)
K1200BZ10	M10	405
K1200BZ12	M12	580

Horizontal Mounting Plate

FINISH: Zinc Plated only

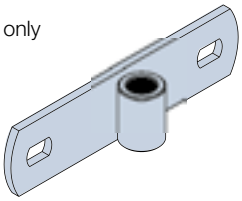

CODE	THREAD SIZE	WORKING LOAD (kg)
K1200CZ10	M10	530
K1200CZ12	M12	600

Wedge Nuts for Bondek®

FINISH: Zinc Plated only

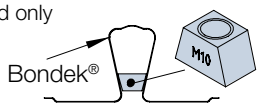

CODE	SIZE
KWN06	M6
KWN08	M8
KWN10	M10
KWN12	M12

Mounting Plate Material: 100 x 25 x 2.5 mm thick
Finish : Zinc plate finish

Central Male Mounting Plate

FINISH: Zinc Plated only

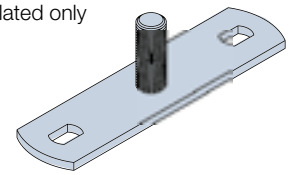

CODE	THREAD SIZE	WORKING LOAD (kg)
K1200DZ10	M10	320
K1200DZ12	M12	480

E.&O.E.

K-Strut Fittings

Channel Carriages

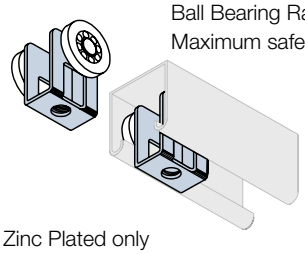

Ball Bearing Race
Maximum safe working load 23 kg

FINISH: Zinc Plated only

K2749Z

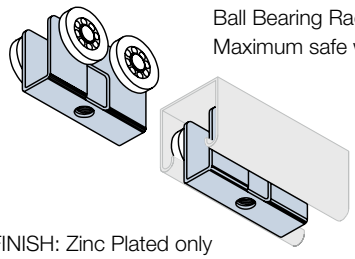

Ball Bearing Race
Maximum safe working load 45 kg

FINISH: Zinc Plated only

K2750Z

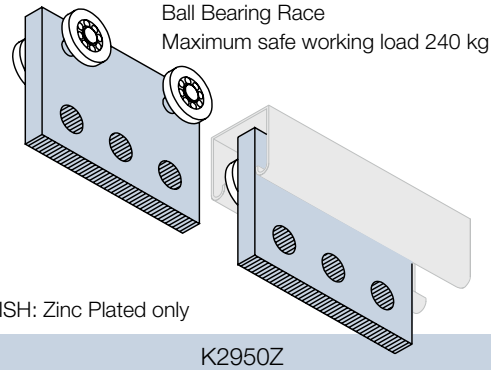

Ball Bearing Race
Maximum safe working load 240 kg

FINISH: Zinc Plated only

K2950Z

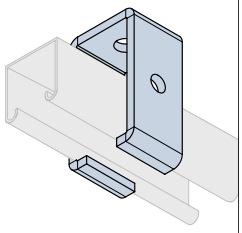

FINISH: Hot Dip Galv only

K1834H

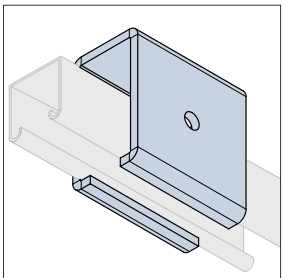

FINISH: Hot Dip Galv only

K1834AH

Angle Fittings

Obtuse Angle Fitting

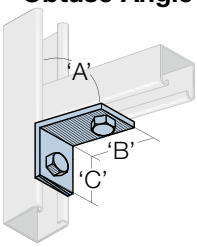

K2095
K2097
K1546

Obtuse Angle Fitting

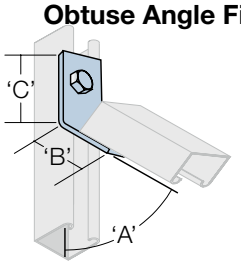

K2101
K2103

AVAILABLE FINISH	
SUFFIX	DESCRIPTION
H	Hot Dip Galvanised
S	316 Stainless Steel

When Ordering add suffix to end of product code

OBTUSE ANGLE FITTING			
CODE	A °	B	C
K2095	75	91	43
K2097	60	86	48
K1546	45	76	60
K2101	30	83	52
K2103	15	84	52
ACUTE ANGLE FITTING			
CODE	A °	B	C
K2106	75	80	63
K2108	60	80	63
K1186	45	80	63
ANGLE FITTING			
CODE	A	B	C
K2452	41	346	422

Angular Fitting

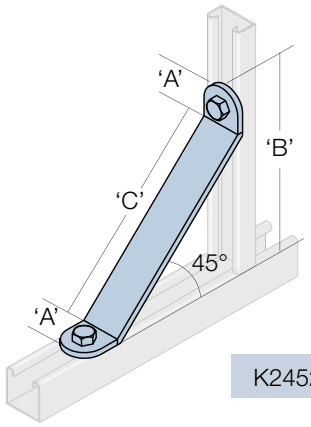

K2452

Acute Angle Fitting

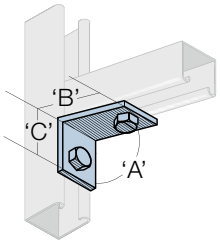

K2106
K2108
K1186

Hinged Bracket

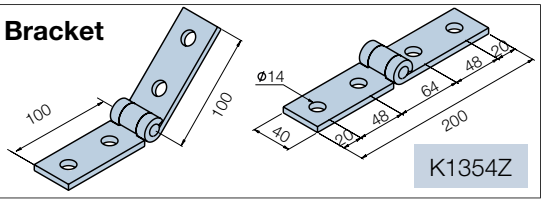

K1354Z

NOTE: Material thickness 6 mm. Hole diameter 14 mm. Channel nuts and bolts order separately.

E.&O.E.

K-Strut Fittings

90° Fittings

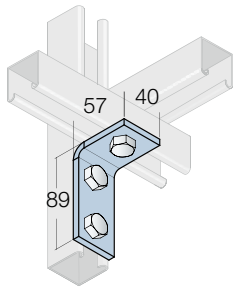

K1458

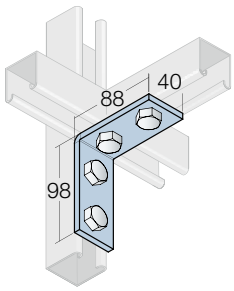

K1325

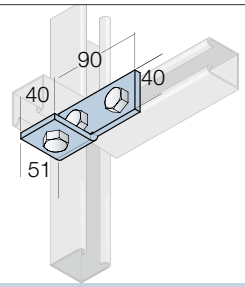

K1037 Left Hand

K1038 Right Hand

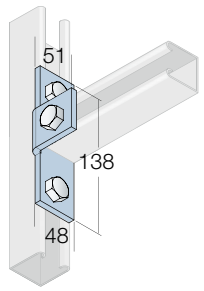

K1033

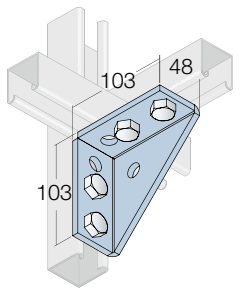

K2484

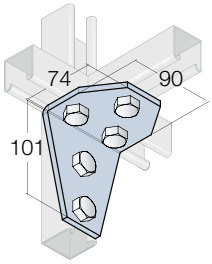

K2235

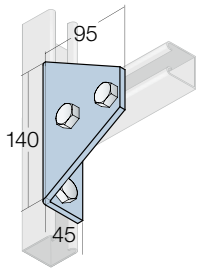

K1727

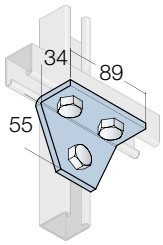

K1357

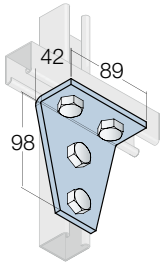

K1359

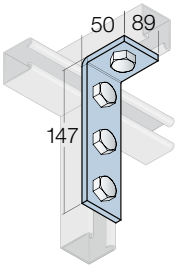

K1474

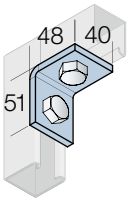

K1026

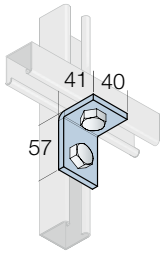

K1068

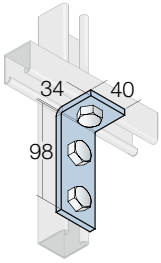

K1326

Base Plate Holes
4 x 14 mm diameter

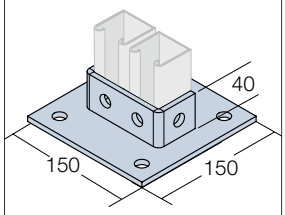

K2073

Base Plate Holes
4 x 14 mm diameter

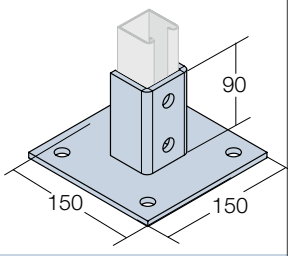

K2072A

Base Plate Holes
1 x 14 mm diameter
central

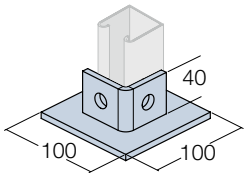

K2072S1

AVAILABLE FINISH	
SUFFIX	**DESCRIPTION**
H	Hot Dip Galvanised
S	316 Stainless Steel

When Ordering add suffix to end of product code

NOTES: Material thickness 6 mm hole diameter 14 mm
Channel nuts and bolts ordered seperately

E.&O.E.

K-Strut Fittings

Flat Fittings

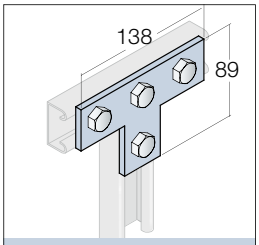

K1031

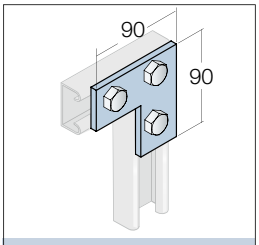

K1036

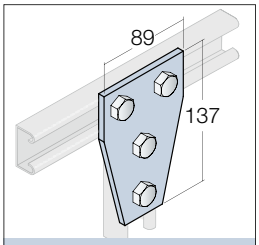

K1358

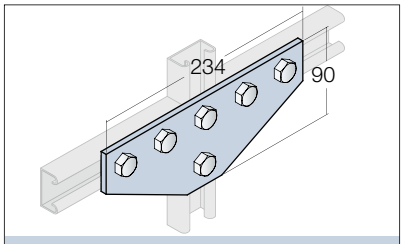

K1953

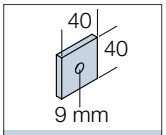

K1062

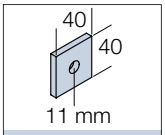

K1063

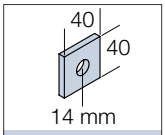

K1064

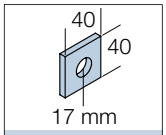

K1964

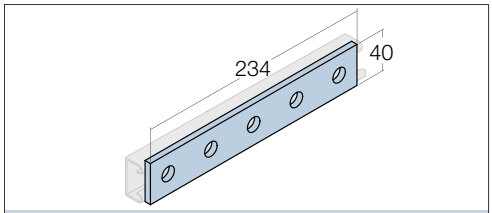

K1941

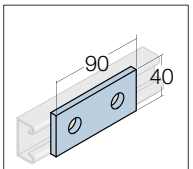

K1065

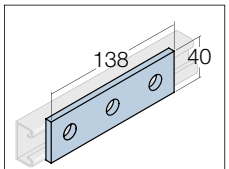

K1066

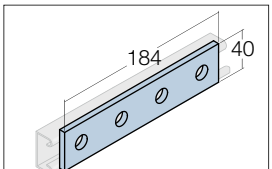

K1067

AVAILABLE FINISH	
SUFFIX	**DESCRIPTION**
H	Hot Dip Galvanised
S	316 Stainless Steel

When Ordering add suffix to end of product code

"U" & "Z" Fittings

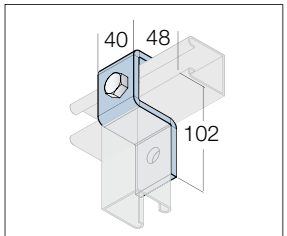

K1046

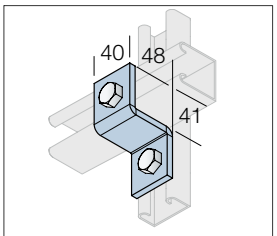

K1045

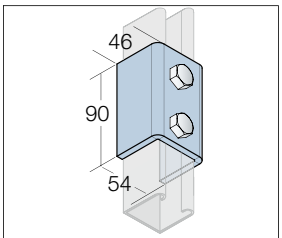

K1376

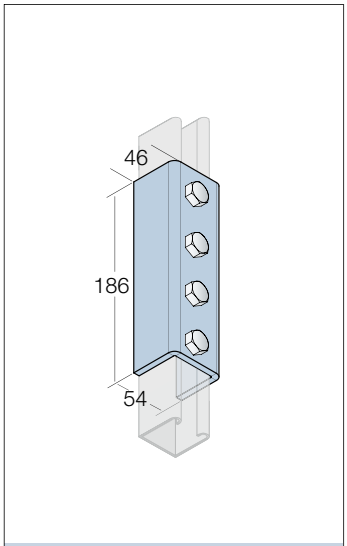

K1377

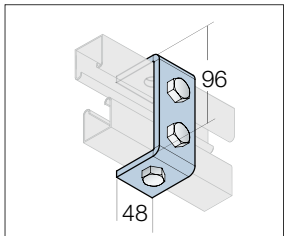

K1044

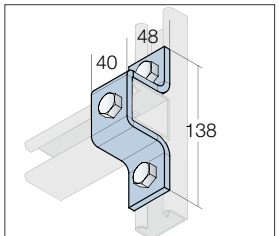

K1047

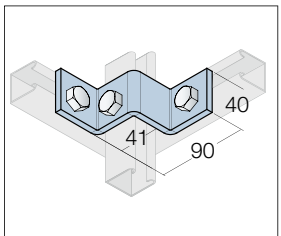

K1736

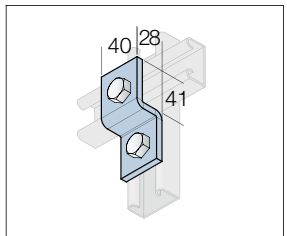

K4045

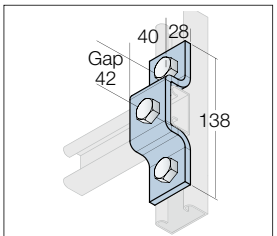

K4047

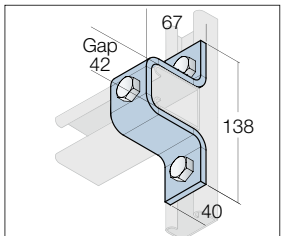

K5547

AVAILABLE FINISH	
SUFFIX	**DESCRIPTION**
H	Hot Dip Galvanised
S	316 Stainless Steel

When Ordering add suffix to end of product code

E.&O.E.

K-Strut Fittings

Winged Shape Fittings

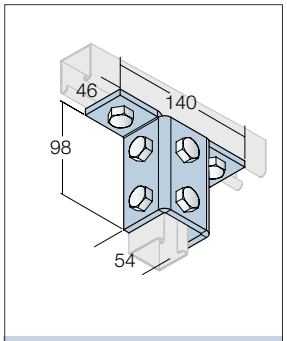

K2346

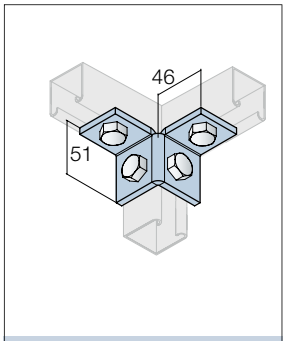

K2223

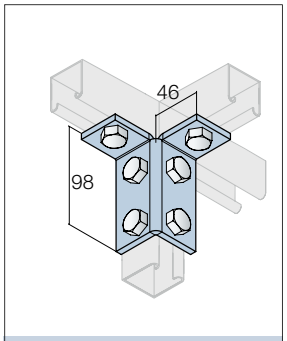

K2224

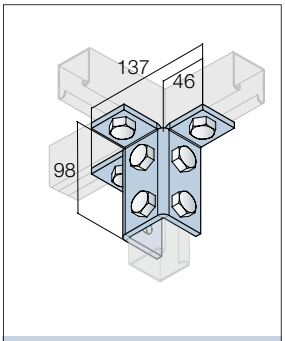

K2228

Lighting Supports

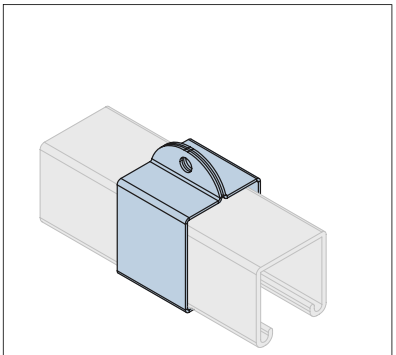

FINISH: Zinc Plated only

K2539

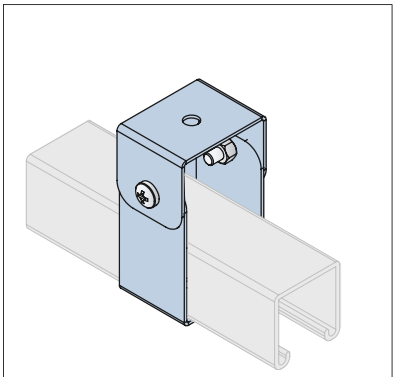

K2335

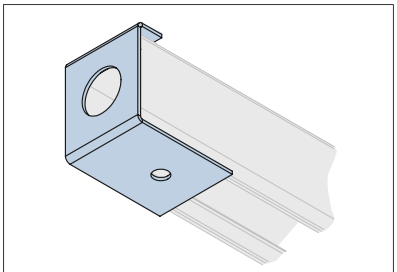

CHANNEL END CONDUIT ENTRY	
CODE	CONDUIT ENTRY SIZE
K2521-75	19 mm
K2521-100	25 mm

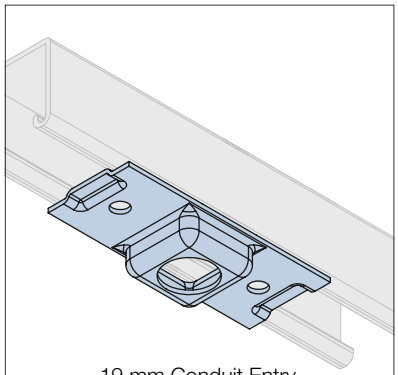

19 mm Conduit Entry

K2535-75

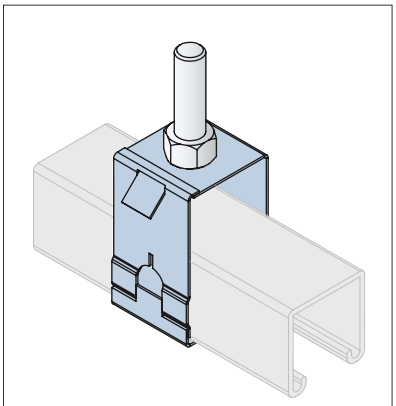

K2855

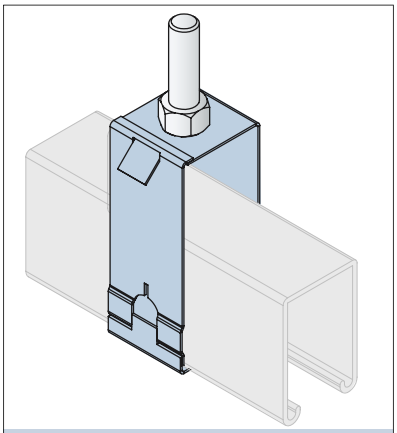

K2755

AVAILABLE FINISH	
SUFFIX	DESCRIPTION
H	Hot Dip Galvanised
Z	Zinc Plated

When Ordering add suffix to end of product code

E.&O.E.

K-Strut Fittings

Joiner Boxes/PVC Accessories

Tee

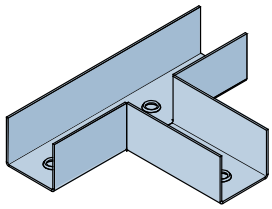

K1221

Cross

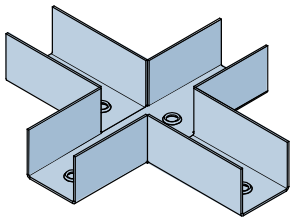

K1222

90° Elbow

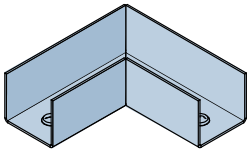

K1220

Splice

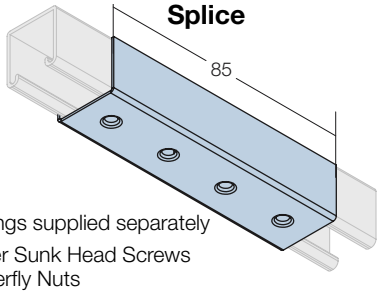

Zinc Plated Fastenings supplied separately
4 x M6 x 16 Counter Sunk Head Screws
4 x K3016 M6 Butterfly Nuts

K922

AVAILABLE FINISH	
SUFFIX	DESCRIPTION
H	Hot Dip Galvanised
Z	Zinc Plated

When Ordering add suffix to end of product code

End Cap
Suits K3300 & K4000

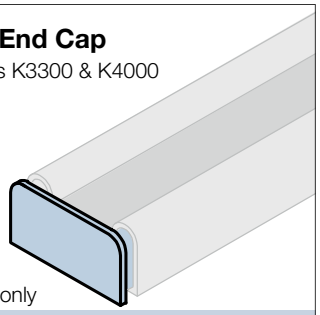

PVC only

K4240 GREY

K4240W WHITE

End Cap
Suits K1000 & K2000

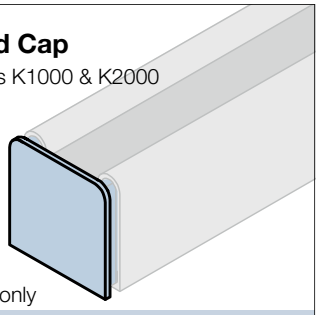

PVC only

K2240 `GREY

K2240W WHITE

End Cap
Suits K5500

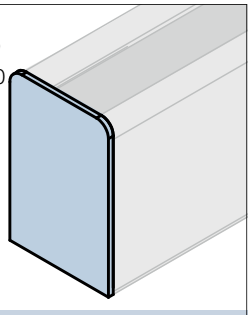

PVC only

K5540 GREY

K5540W WHITE

Closure Strip
3 m Length

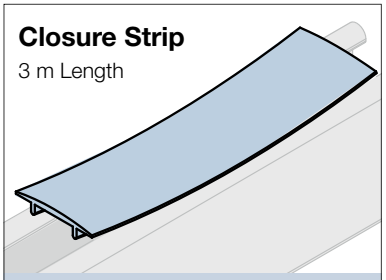

K1184AL ALUM

K1184PL GREY

K1184PL WHITE

Fibre Wire Retainer

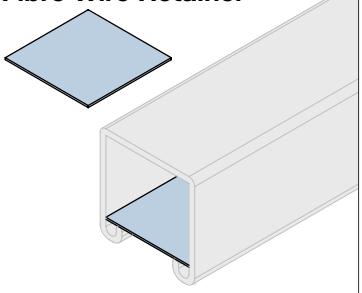

K2552PLA

AVAILABLE FINISH	
SUFFIX	DESCRIPTION
PL	PVC Grey
W	PVC White
AL	Aluminium

E.&O.E.

K-Strut Fittings

Adaptable Beam Clamps

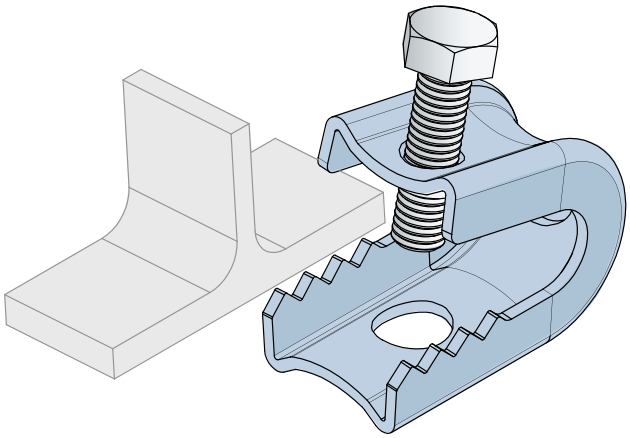

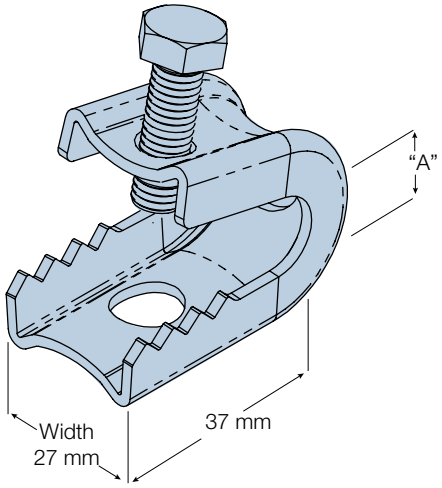

CODE	GRIP "A"	SCREW SIZE
KCC17	17 mm	M8 x 30 Cone Point
KCC36	36 mm	M8 x 50 Cone Point
KCC45	45 mm	M8 x 50 Cone Point

Cable – Pipe Clamps

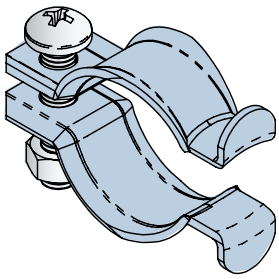

CODE	GRIP DIA.	WIDTH	SCREW SIZE
KAC19	16-20 mm	16 mm	M5 x 20 R/H screw & nut
KAC25	21-25 mm	16 mm	M5 x 20 R/H screw & nut
KAC31	27-32 mm	16 mm	M5 x 20 R/H screw & nut
KAC42	40-44 mm	20 mm	M5 x 20 R/H screw & nut
KAC48	47-51 mm	20 mm	M5 x 20 R/H screw & nut

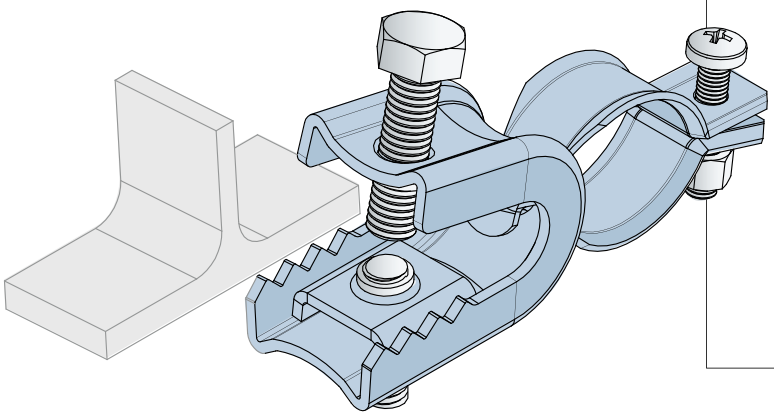

General Arrangement of Assembly with Cable Clamp and Drop Rod

Drop Rod Locators

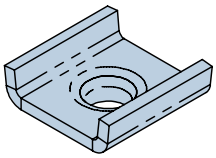

CODE	DROP ROD SIZE
KRC06	M6
KRC08	M8
KRC10	M10

AVAILABLE FINISH	
SUFFIX	DESCRIPTION
H	Hot Dip Galvanised
Z	Zinc Passivated
S	316 Stainless Steel
When Ordering add suffix to end of product code	

E.&O.E.

K-Strut Fittings

Supports/Hangers

Slotted Angle

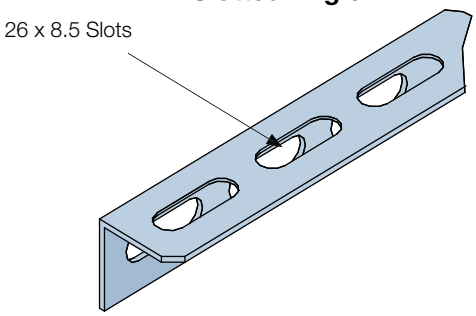

CODE	DESCRIPTION
KSA25	25 x 25 x 3 mm Slotted Angle MATERIAL: Hot Dip Galvanised LENGTH: 3 m
KSA40	40 x 40 x 5 mm Slotted Angle MATERIAL: Hot Dip Galvanised LENGTH: 3.75 m
KSA50	50 x 50 x 3 mm Slotted Angle MATERIAL: Hot Dip Galvanised LENGTH: 3 m

CODE	DESCRIPTION
KSF40	40 x 40 x 5 mm Slotted Flat MATERIAL: Hot Dip Galvanised LENGTH: 3 m

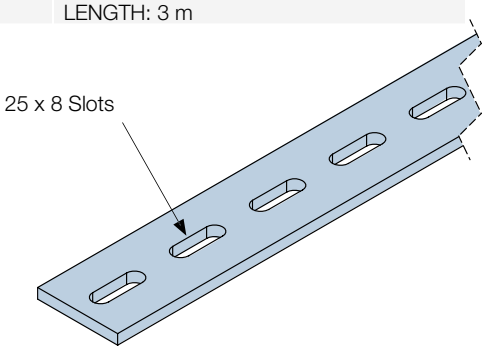

Slotted Channel

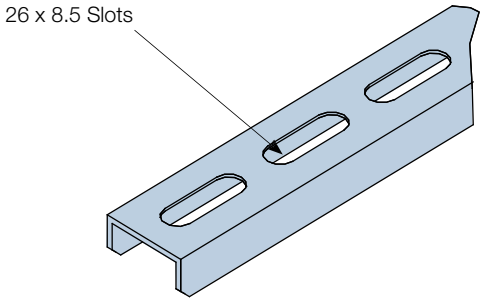

CODE	DESCRIPTION
KSC25	25 x 25 x 1.6 mm Slotted Channel MATERIAL: Plain Galvanised Iron Other finishes available on request LENGTH: 2.4 m

Slotted Z Bar

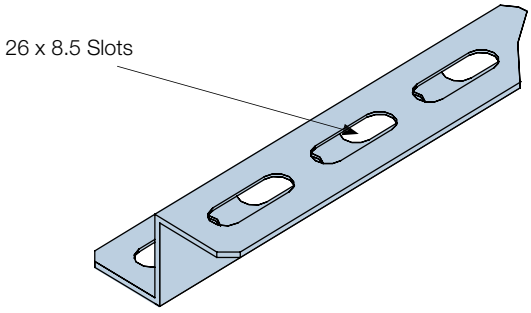

CODE	DESCRIPTION
KSZ25	25 x 25 x 1.6mm Slotted Z Bar MATERIAL: Plain Galvanised Iron Other finishes available on request LENGTH: 2.4m

Light Duty Tray Hangers

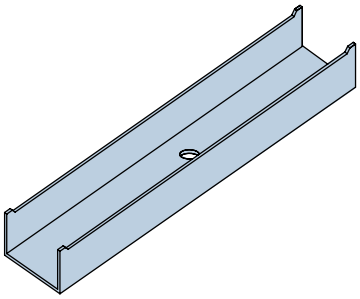

CODE	DESCRIPTION
KTH75	Suits 75 mm wide tray
KTH100	Suits 100 mm wide tray
KTH150	Suits 150 mm wide tray
KTH230	Suits 230 mm wide tray
KTH300	Suits 300 mm wide tray
KTH450	Suits 450 mm wide tray
KTH600	Suits 600 mm wide tray

AVAILABLE FINISH	
SUFFIX	DESCRIPTION
H	Hot Dip Galvanised
S	316 Stainless Steel

When Ordering add suffix to end of product code

E.&O.E.

Structural Steel Hot Dip Galvanised

MS Flat Bar

CODE	SIZE	LENGTH
KF506	50 x 6 mm	6 m
KF756	75 x 6 mm	6 m
KF1006	100 x 6 mm	6 m
KF1506	150 x 6 mm	6 m

Other sizes available on request

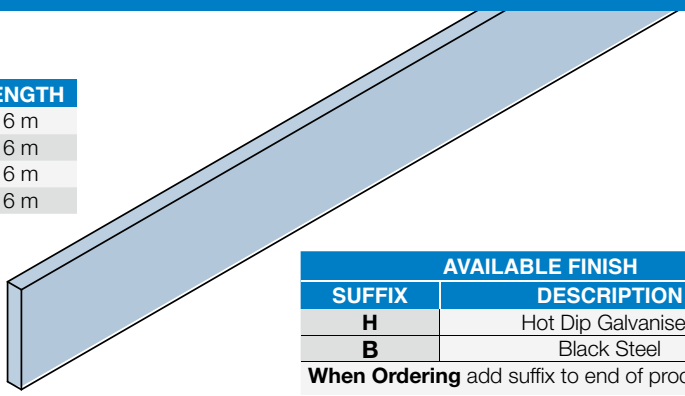

AVAILABLE FINISH	
SUFFIX	DESCRIPTION
H	Hot Dip Galvanised
B	Black Steel

When Ordering add suffix to end of product code

MS Equal Angle

CODE	SIZE	LENGTH
KA506	50 x 50 x 6 mm	7.5 m
KA756	75 x 75 x 6 mm	7.5 m

Other sizes available on request

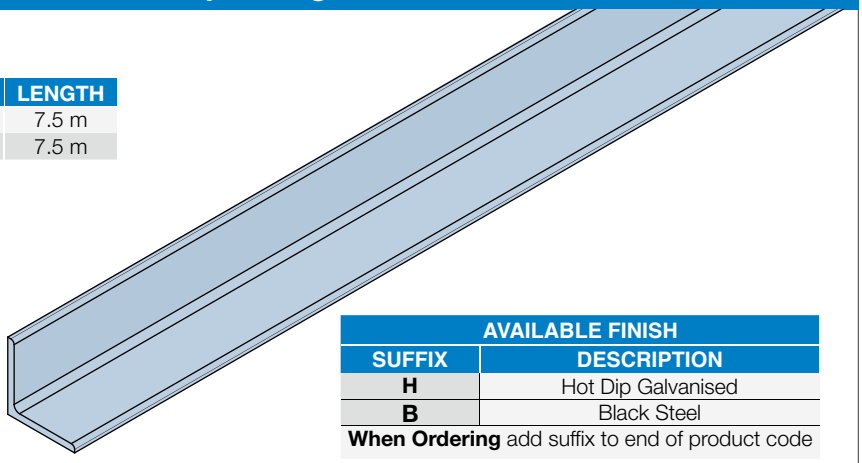

AVAILABLE FINISH	
SUFFIX	DESCRIPTION
H	Hot Dip Galvanised
B	Black Steel

When Ordering add suffix to end of product code

MS Channel

CODE	SIZE	LENGTH
KC74	75 x 40 mm	6 m
KC105	100 x 50 mm	6 m
KC157	150 x 75 mm	6 m

Other sizes available on request

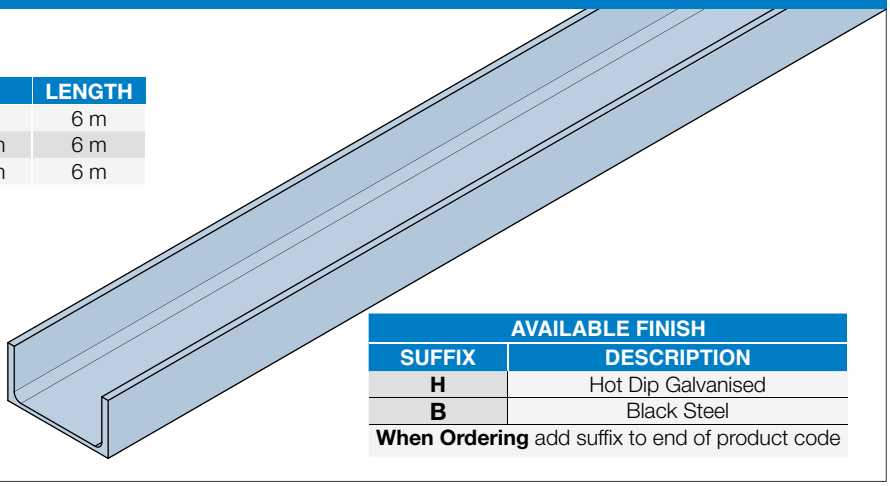

AVAILABLE FINISH	
SUFFIX	DESCRIPTION
H	Hot Dip Galvanised
B	Black Steel

When Ordering add suffix to end of product code

STRUCTURAL STEEL: AS/NZS 3679
HOT DIP GALVANISED: AS/NZS 4680

E.&O.E.

K-Strut Fittings

Channel Nuts

Channel Nut- Long Spring for K1000/K2000 Channel

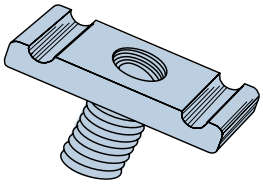

CODE	SIZE
K1006	M6
K1007	M8
K1008	M10
K1010	M12
K1012	M16

Channel Nut- Without Spring for all Channel Types

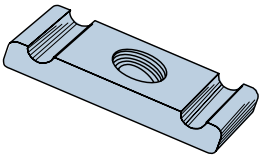

CODE	SIZE
K3016	M6
K3006	M6
K3007	M8
K3008	M10
K3010	M12
K3012	M16

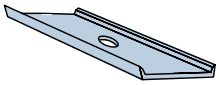

K3016

Channel Nut- Short Spring for K3300/K4000 Channel

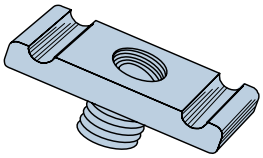

CODE	SIZE
K4006	M6
K4007	M8
K4008	M10
K4010	M12

Channel Nut- Long Spring for K5500 Channel

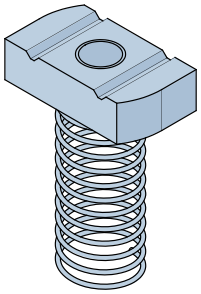

CODE	SIZE
K5508	M10
K5510	M12

Stud Nuts

Stud Nut – Long Spring for K1000 Channel

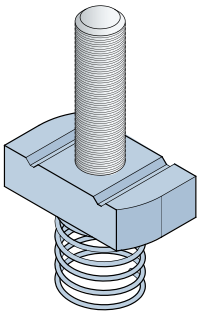

CODE	SIZE
K2378	M6
K2379	M8
K2380	M10
K2381	M12

Stud Nut without Spring

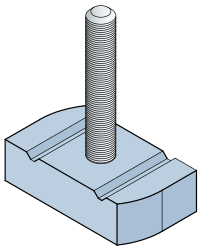

CODE	SIZE
K3116	M6

AVAILABLE FINISH	
SUFFIX	DESCRIPTION
H	Hot Dip Galvanised
Z	Zinc Passivated
S	316 Stainless Steel

When Ordering add suffix to end of product code

E.&O.E.

K-Strut Fittings

Fasteners

Hex Head Set Screws

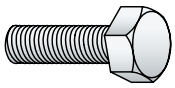

CODE	SIZE
HHS0620	M6 x 20
HHS0625	M6 x 25
HHS0820	M8 x 20
HHS0825	M8 x 25
HHS0830	M8 x 30
HHS1020	M10 x 20
HHS1025	M10 x 25
HHS1030	M10 x 30
HHS1040	M10 x 40
HHS1225	M12 x 25
HHS1230	M12 x 30
HHS1240	M12 x 40
HHS1260	M12 x 60
HHS1640	M16 x 40

Pan Head Screws

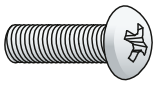

CODE	SIZE
PHS0620	M6 x 20
PHS0625	M6 x 25
PHS0825	M8 x 25

Countersunk Head Screws

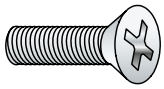

CODE	SIZE
CKS0616	M6 x 16
CKS0620	M6 x 20
CKS0820	M8 x 20

Cone Point Set Screws

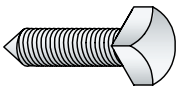

CODE	SIZE
CPS1040	M10 x 40
CPS1240	M12 x 40
CPS1250	M12 x 50

Concrete Anchor Hex Head

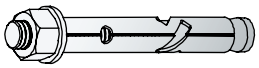

CODE	SIZE
DB0840	M8 x 40
DB1040	M10 x 40
DB1050	M10 x 50
DB1075	M10 x 75
DB1260	M12 x 60
DB12100	M12 x 100

Threaded Rod

CODE	SIZE
KR06	M6
KR08	M8
KR10	M10
KR12	M12
KC16	M16

Threaded Rod Coupler

CODE	SIZE
KC06	M6
KC08	M8
KC10	M10
KC12	M12
KC16	M16

Hexagonal Nuts

CODE	SIZE
HN06	M6
HN08	M8
HN10	M10
HN12	M12
HN16	M16

Flat Washers

CODE	SIZE
FW06	M6
FW08	M8
FW10	M10
FW12	M12
FW16	M16

Spring Washers

CODE	SIZE
SW06	M6
SW08	M8
SW10	M10
SW12	M12
SW16	M16

Anchor/Drop in Type

CODE	SIZE
DIM06	M6 x 25
DIM08	M8x30
DIM10	M10 x 40
DIM12	M12 x 50
DIM16	M16 x 65

Nylon Anchor

ZINC	SIZE
KNMH6538	6.5 x 38

AVAILABLE FINISH	
SUFFIX	DESCRIPTION
H	Hot Dip Galvanised
Z	Zinc Passivated
S	316 Stainless Steel

When Ordering add suffix to end of product code

E.&O.E.

K-Strut Fittings

Fasteners

Steel Sidehanger

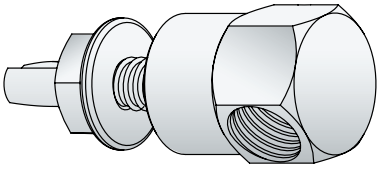

CODE	DESCRIPTION
SHM06	SD3 – 1/4”-20 x 25
SHM08	SD3 – 1/4”-20 x 25 with nuts
SHM10	SD3 – 1/4”-20 x 25 with nuts
SHM12	SD3 – 1/4”-20 x 25 with nuts

Zinc Plated Concrete Screw

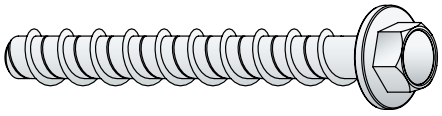

CODE	DESCRIPTION
BT550	5 x 50 mm
BT850	8 x 50 mm
BT875	8 x 75 mm
BT1060	10 x 60 mm
BT1075	10 x 75 mm
BT1275	12 x 75 mm
BT6550	6.5 x 50 mm

Steel Vertical Hanger

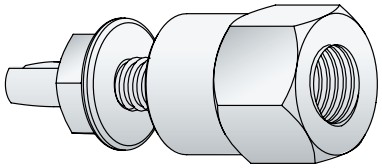

CODE	DESCRIPTION
VHM06	SD3 – 1/4”-20 x 25
VHM08	SD3 – 1/4”-20 x 25 with nuts
VHM10	SD3 – 1/4”-20 x 25 with nuts

Mechanically Galvanised Concrete Screw

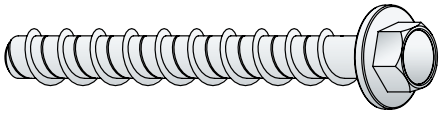

CODE	DESCRIPTION
BT550	5 x 50 mm
BT850	8 x 50 mm
BT875	8 x 75 mm
BT1060	10 x 60 mm
BT1075	10 x 75 mm
BT1275	12 x 75 mm
BT6550	6.5 x 50 mm

Concrete Vertical Hanger

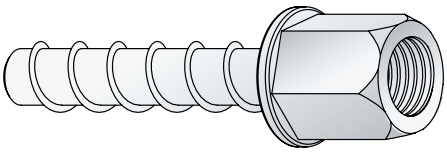

CODE	DESCRIPTION
VH6532-M08	6.5 mm x 32 mm
VH6538-M10	6.5 mm x 38 mm

Socket Driver

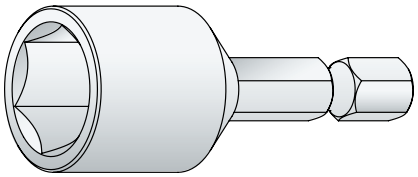

CODE	DESCRIPTION
SD-M8	Socket Driver for M6
SD-M10	Socket Driver for M8

10-16 x 16 Posidrive Tek Scew

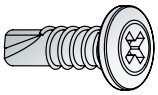

WHKH

10-16 x 16 Hexhead Tek Scew

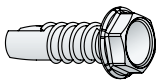

CSKH10

12-14 x 20 Hexhead Tek Scew

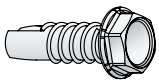

CSKH12

E.&O.E.

Weight Tables

CABLE LADDER WEIGHT TABLES										
LADDER		**2/30**	**3/50**	**4/70L**	**4/70**	**5/112**	**3/50**	**4/70L**	**4/70**	**5/112**
Ladder 6M	150	20.28	25.71	31.81	39.16	44.92	25.71	31.81	39.16	44.92
	300	23.16	28.59	34.69	42.04	47.80	28.59	34.69	42.04	47.80
	450	25.77	31.21	37.30	44.66	52.82	31.21	37.30	44.66	52.82
	600	28.46	33.90	39.99	47.35	56.38	33.90	39.99	47.35	56.38
	750	30.94	36.38	42.47	49.83	59.94	36.38	42.47	49.83	59.94
	900	33.73	39.16	45.26	52.62	61.27	39.16	45.26	52.62	61.27
Splice Plate	Universal	0.18	0.47	1.32	1.63	1.86	0.47	1.32	1.63	1.86
BENDS		**300R**	**300R**	**300R**	**300R**	**300R**	**450R**	**450R**	**450R**	**450R**
Bends 90°	150	1.68	2.63	4.17	5.11	5.69	3.26	4.98	6.12	6.84
	300	2.37	3.42	5.06	6.10	6.74	4.35	6.16	7.41	8.18
	450	3.44	4.61	6.33	7.48	8.75	5.24	7.16	8.51	9.99
	600	4.24	5.52	7.34	8.59	10.11	6.73	8.74	10.19	12.15
	750	5.00	6.39	8.31	9.66	11.46	7.75	9.84	11.40	13.71
	900	5.82	7.33	9.32	10.78	12.32	8.83	11.03	12.69	14.51
RISERS 90°		**300R**	**300R**	**300R**	**300R**	**300R**	**450R**	**450R**	**450R**	**450R**
Risers 90°	150	1.44	2.40	3.98	4.91	5.54	3.15	4.92	6.06	6.82
	300	1.76	2.72	4.30	5.23	5.86	3.63	5.40	6.54	7.30
	450	2.05	3.01	4.59	5.52	6.41	4.07	5.84	6.97	8.22
	600	2.35	3.30	4.89	5.82	6.81	4.52	6.29	7.42	8.82
	750	2.62	3.58	5.16	6.09	7.20	4.93	6.70	7.83	9.42
	900	2.93	3.89	5.47	6.40	7.36	5.40	7.17	8.30	9.55
TEES		**300R**	**300R**	**300R**	**300R**	**300R**	**450R**	**450R**	**450R**	**450R**
Equal Tees	150	3.88	5.39	7.14	8.42	9.29	7.29	9.30	11.09	12.22
	300	4.88	6.51	8.34	9.72	10.65	8.69	10.78	12.66	13.87
	450	6.29	8.01	9.91	11.37	13.05	9.89	12.17	14.17	16.29
	600	7.44	9.23	11.22	12.77	14.75	11.69	13.95	16.01	18.62
	750	8.51	10.40	12.45	14.10	16.47	12.98	15.32	17.47	20.54
	900	10.55	12.54	14.67	16.40	18.59	15.26	17.68	19.92	22.56
CROSS		**300R**	**300R**	**300R**	**300R**	**300R**	**450R**	**450R**	**450R**	**450R**
Equal Cross	150	5.82	7.51	10.39	12.07	13.10	10.40	13.41	15.75	17.03
	300	7.00	8.69	11.56	13.24	14.28	11.73	14.74	17.08	18.37
	450	8.54	10.23	13.10	14.78	16.62	12.98	15.99	18.33	20.58
	600	9.81	11.50	14.37	16.06	18.18	14.84	17.85	20.19	22.95
	750	11.01	12.70	15.58	17.26	19.74	16.18	19.19	21.53	24.73
	900	13.19	14.88	17.76	19.44	21.60	18.52	21.53	23.87	26.44
BENDS 45°		**300R**	**300R**	**300R**	**300R**	**300R**	**450R**	**450R**	**450R**	**450R**
Bends 45°	150	1.04	1.72	3.06	3.76	4.13	2.02	3.42	4.21	4.69
	300	1.46	2.20	3.54	4.28	4.73	2.50	3.95	4.80	5.31
	450	1.85	2.63	4.03	4.82	5.57	2.95	4.44	5.34	6.21
	600	2.25	3.09	4.54	5.38	6.26	4.00	5.53	6.47	7.69
	750	2.63	3.53	5.02	5.91	6.94	4.57	6.14	7.13	8.57
	900	3.04	4.00	5.53	6.47	7.37	5.18	6.82	7.86	8.98
RISERS 45°		**300R**	**300R**	**300R**	**300R**	**300R**	**450R**	**450R**	**450R**	**450R**
Risers 45°	150	0.98	1.66	2.99	3.68	4.11	1.98	3.39	4.18	4.69
	300	1.30	1.98	3.31	4.00	4.43	2.30	3.71	4.50	5.01
	450	1.59	2.27	3.60	4.29	4.99	2.59	4.00	4.79	5.62
	600	1.89	2.57	3.90	4.59	5.39	2.89	4.30	5.09	6.02
	750	2.17	2.85	4.18	4.86	5.79	3.17	4.58	5.36	6.42
	900	2.48	3.16	4.49	5.17	5.93	3.48	4.89	5.67	6.51
REDUCERS		**300R**	**300R**	**300R**	**300R**	**300R**	**450R**	**450R**	**450R**	**450R**
Straight Reducers	300	1.32	2.14	3.42	4.17	4.62	2.14	3.42	4.17	4.62
	450	1.62	2.45	3.73	4.47	4.92	2.45	3.73	4.47	4.92
	600	1.96	2.89	3.88	4.62	5.85	2.89	3.88	4.62	5.85
	750	2.31	3.03	4.31	5.06	5.93	3.03	4.31	5.06	5.93
	900	2.66	3.48	4.76	5.51	6.55	3.48	4.76	5.51	6.55
NOTE: Type 4/70L fittings from 1.6 m steel – Type 4/70 from 2.0 m steel										

E.&O.E.

Weight Tables

CABLE LADDER WEIGHT TABLES								
LADDER		3/50	4/70L	4/70	5/112	3/50 Fire Rated	4/70L Fire Rated	5/112 Fire Rated
Ladder 6 m	150	25.71	31.81	39.16	44.92	26.20	32.24	46.67
	300	28.59	34.69	42.04	47.80	29.29	35.33	51.21
	450	31.21	37.30	44.66	52.82	32.38	38.42	55.74
	600	33.90	39.99	47.35	56.38	35.47	41.51	60.28
	750	36.38	42.47	49.83	59.94	N/A	N/A	N/A
	900	39.16	45.26	52.62	61.27	41.65	47.69	69.35
Splice Plate	Universal	0.47	1.32	1.63	1.86	0.47	1.32	1.86
BENDS		600R	600R	600R	600R	600R	600R	600R
Bends 90°	150	4.02	5.94	7.29	8.12	5.84	8.35	12.22
	300	4.98	6.97	8.43	9.32	7.13	9.77	14.31
	450	6.30	8.41	9.96	11.61	8.44	11.20	16.39
	600	7.37	9.57	11.22	13.17	9.69	12.63	18.49
	750	8.36	10.67	12.43	14.74	N/A	N/A	N/A
	900	10.34	12.73	14.60	16.71	12.34	15.49	22.69
RISERS 90°		600R	600R	600R	600R	600R	600R	600R
Risers 90°	150	3.78	5.75	7.09	7.95	5.61	7.36	11.02
	300	4.26	6.23	7.57	8.43	6.46	8.05	12.28
	450	4.69	6.67	8.00	9.26	7.32	8.73	13.54
	600	5.14	7.11	8.45	9.86	8.18	9.42	14.80
	750	5.56	7.53	8.87	10.45	N/A	N/A	N/A
	900	6.02	7.99	9.33	10.68	9.90	10.79	17.32
TEES		600R	600R	600R	600R	600R	600R	600R
Equal Tees	150	9.81	12.50	14.57	15.90	11.97	16.30	21.77
	300	11.55	14.32	16.48	17.87	13.98	18.73	24.75
	450	13.04	15.89	18.15	20.54	15.81	21.00	27.48
	600	15.16	18.09	20.43	23.43	18.52	24.13	31.22
	750	16.74	19.75	22.19	25.73	N/A	N/A	N/A
	900	19.34	22.43	24.96	28.07	25.44	29.85	41.72
CROSS		600R	600R	600R	600R	600R	600R	600R
Equal Cross	150	14.29	17.92	20.42	21.95	17.68	22.71	30.08
	300	16.24	19.87	22.37	23.90	20.46	25.49	33.98
	450	17.92	21.56	24.05	26.78	23.06	28.09	37.63
	600	20.23	23.86	26.36	29.72	26.35	31.38	42.29
	750	22.11	25.74	28.24	32.20	N/A	N/A	N/A
	900	24.78	28.42	30.91	34.22	32.93	37.96	51.60
BENDS 45°		600R	600R	600R	600R	600R	600R	600R
Bends 45°	150	2.34	3.83	4.73	5.26	ON APLICATION	ON APLICATION	ON APLICATION
	300	2.82	4.35	5.29	5.88			
	450	3.27	4.86	5.85	6.71			
	600	4.30	5.94	6.99	8.18			
	750	4.88	6.56	7.65	9.05			
	900	5.50	7.23	8.38	9.56			
RISERS 45°		600R	600R	600R	600R	600R		
Risers 45°	150	2.29	3.81	4.69	5.26	ON APLICATION	ON APLICATION	ON APLICATION
	300	2.61	4.13	5.01	5.58			
	450	2.90	4.42	5.30	6.13			
	600	3.20	4.72	5.60	6.53			
	750	3.47	4.99	5.88	6.92			
	900	3.78	5.30	6.19	7.07			
REDUCERS		Std	Std	Std	Std	Std	Std	Std
Straight Reducers	300	2.14	3.42	4.17	4.62	ON APLICATION	ON APLICATION	ON APLICATION
	450	2.45	3.73	4.47	4.92			
	600	2.89	3.88	4.62	5.85			
	750	3.03	4.31	5.06	5.93			
	900	3.48	4.76	5.51	6.55			

E.&O.E.

Weight Tables

CABLE LADDER & FITTINGS						
Kounis Type		2/30	3/50	4/70L	4/70	5/112
Straight Ladder 6 m Length	150 mm	19.70	26.20	32.30	39.28	44.98
	300 mm	22.30	29.08	35.17	42.13	47.83
	450 mm	24.90	31.95	38.05	47.11	52.82
	600 mm	27.50	34.83	40.93	50.67	56.38
	750mm	30.10	37.70	43.80	54.24	59.94
	900 mm	32.70	44.89	50.99	57.80	63.50
		0.30	0.47	1.32	1.63	1.86

Kounis Type		2/30	3/50	4/70L & 4/70	5/112	3/50	4/70L & 4/70	5/112	3/50	4/70L & 4/70	5/112
Radius		300R	300R	300R	300R	450R	450R	450R	600R	600R	600R
Bend Fitting 90°	150 mm	1.62	2.72	4.25	5.72	3.34	5.06	6.92	4.13	6.04	8.15
	300 mm	2.36	3.50	5.14	6.75	4.46	6.27	8.28	5.09	7.08	9.34
	450 mm	3.32	4.78	6.50	8.75	5.41	7.32	9.99	6.51	8.61	11.61
	600 mm	4.18	5.72	7.55	10.11	6.99	9.00	12.15	7.63	9.83	13.17
	750 mm	6.00	6.68	8.60	11.46	8.12	10.21	13.71	8.73	11.04	14.74
	900 mm	7.80	8.60	10.60	12.83	10.42	12.62	15.29	12.25	14.64	17.49
Riser Internal / External Fitting 90°	150 mm	1.50	2.45	4.03	5.54	3.24	5.01	6.90	3.86	5.83	7.96
	300 mm	1.82	2.77	4.35	5.86	3.71	5.49	7.38	4.34	6.31	8.43
	450 mm	2.14	3.09	4.67	6.41	4.19	5.96	8.22	4.82	6.79	9.26
	600 mm	2.46	3.41	4.99	6.81	4.67	6.44	8.82	5.30	7.27	9.86
	750 mm	2.78	3.73	5.31	7.20	5.15	6.92	9.42	5.78	7.75	10.45
	900 mm	3.10	4.53	6.11	7.60	6.35	8.12	10.02	6.98	8.95	11.04
Equal Tee Fitting	150 mm	3.92	5.50	7.25	9.31	7.40	9.41	12.33	9.98	12.67	15.91
	300 mm	5.20	6.61	8.45	10.65	8.83	10.91	14.01	11.74	14.50	17.89
	450 mm	6.68	8.21	10.12	13.05	10.10	12.38	16.29	13.33	16.18	20.54
	600 mm	7.24	9.49	11.48	14.75	12.00	14.26	18.62	15.57	18.50	23.43
	750 mm	8.47	10.77	12.82	16.47	13.43	15.76	20.54	17.33	20.34	25.73
	900 mm	9.70	14.45	16.58	19.35	17.49	19.91	23.66	22.20	25.29	29.21
Equal Cross Fitting	150 mm	4.77	7.65	10.52	13.11	10.56	13.57	17.19	14.51	18.14	21.96
	300 mm	5.94	8.82	11.70	14.27	11.89	14.91	18.53	16.48	20.12	23.92
	450 mm	7.61	10.48	13.35	16.62	13.23	16.24	20.58	18.29	21.93	26.78
	600 mm	8.93	11.81	14.69	18.18	15.20	18.21	22.95	20.75	24.38	29.72
	750 mm	10.26	13.14	16.02	19.74	16.69	19.71	24.73	22.84	26.48	32.20
	900 mm	14.23	17.11	19.99	22.49	21.06	24.08	27.70	28.29	31.92	35.61
Bend Fitting 45°	150 mm	0.85	1.77	3.12	4.14	2.08	3.47	4.75	2.40	3.89	5.26
	300 mm	1.18	2.25	3.59	4.74	2.56	4.01	5.37	2.88	4.41	5.88
	450 mm	1.66	2.72	4.11	5.57	3.04	4.53	6.21	3.36	4.94	6.71
	600 mm	2.09	3.20	4.65	6.26	4.15	5.68	7.69	4.46	6.10	8.18
	750 mm	3.00	3.67	5.17	6.94	4.79	6.36	8.57	5.10	6.78	9.05
	900 mm	3.90	4.63	6.16	7.62	6.14	7.78	9.45	6.46	8.19	9.94
Riser Internal / External Fitting 45°	150 mm	0.90	1.72	3.05	4.12	2.04	3.45	4.75	2.34	3.86	5.26
	300 mm	1.10	2.04	3.37	4.44	2.36	3.77	5.07	2.66	4.18	5.58
	450 mm	1.30	2.36	3.69	5.00	2.68	4.09	5.62	2.98	4.50	6.13
	600 mm	1.47	2.68	4.01	5.39	3.00	4.41	6.02	3.30	4.82	6.53
	750 mm	1.70	3.00	4.33	5.79	3.32	4.73	6.42	3.62	5.14	6.92
	900 mm	1.86	3.79	5.13	6.18	4.11	5.53	6.82	4.42	5.94	7.32
Reducers Straight & Offset	300 mm-150mm	0.93	2.20	3.47	4.63	2.20	3.47	4.63	2.20	3.47	4.63
	450 mm-300mm	1.25	2.52	3.79	4.95	2.52	3.79	4.95	2.52	3.79	4.95
	600 mm-450mm	1.70	2.97	3.95	5.85	2.97	3.95	5.85	2.97	3.95	5.85
	750 mm-600 mm	1.89	3.16	4.43	5.94	3.16	4.43	5.94	3.16	4.43	5.94

Note: Weight table includes Hot Dip Galvanised and 316 Stainless Steel

E.&O.E.

Weight Tables

CABLE TRAY SYSTEMS							
Kounis Type	Light Duty Tray				Punched Tray		
Range/Finish	LD Galvabond	LD Aluminium	LD HDG	LD 316 SS	CP Galvabond	KAPT Galvabond	CT HDG
75 mm	2.18	1.91	2.29	2.61	1.56	1.22	5.3
100 mm	2.54	2.22	2.66	3.04	1.93	1.51	6.21
150 mm	3.29	2.89	3.46	3.94	2.67	2.1	7.79
230 mm	4.45	3.9	4.67	5.33	3.86	2.96	10.33
300 mm	5.52	4.84	5.79	6.61	4.89	3.83	12.55
450 mm	11.68	6.79	12.26	9.27	10.74	5.58	17.3
600 mm	15.03	8.74	15.78	11.93	14.09	7.32	22.05
Splice Plates	0.2	0.18	0.21	0.24	0.2	N/A	0.11

Kounis Type	Ladder Tray			
Range/Finish	KT3 Galvabond	KT3 HDG	KT5 Galvabond	KT5 HDG
150 mm	5.8	6.15	7.2	7.64
300 mm	8.6	9.17	9.9	10.5
450 mm	11.4	12.09	12.6	13.36
600 mm	14.2	15.06	15.3	16.22
Splice Plate	0.17	0.18	0.32	0.34

STANDARD CABLE DUCT						
	Screw Lid			Clip Lid		
	CODE	Duct Size	Weight kg	CODE	Duct Size	Weight kg
Duct x 2.4 m Length	KDS75	75 x 50 mm	3.94	KDC75	75 x 50	3.77
	KDS155	150 x 50 mm	3.94	KDC155	150 x 50	3.77
	KDS55	50 x 50 mm	3.49	KDC55	50 x 50	3.45
	KDS77	75 x 75 mm	5.05	KDC77	75 x 75	4.99
	KDS107	100 x 75 mm	4.68	KDC107	100 x 75	4.45
	KDS1517	150 x 75 mm	6.26	KDC1517	150 x 75	5.93
	KDS105	100 x 50 mm	4.97	KDC105	100 x 50	4.8
	KDS1010	100 x 100 mm	6.45	KDC1010	100 x 100	6.22
	KDS1510	150 x 100 mm	8.04	KDC1510	150 x 100	7.9
	KDS2010	200 x 100 mm	9.23	KDC2010	200 x 100	8.9
	KDS3015	300 x 150 mm	1.03	KDC3015	300 x 150	1.22
	KDS1515	150 x 150 mm	9.43	KDC1515	150 x 150	9.39

Material		0.6 mm	1.2 mm	1.55 mm	1.2 mm	1.6 mm	0.6 mm	1.0 mm	2.0 mm
Straight Cover 3 m Length	150 mm	3.15	6.37	8.79	7.05	9.35	3.28	1.85	11.18
	300 mm	5.55	11.21	15.46	11.5	16.45	5.77	3.25	19.82
	450 mm	7.94	16.05	22.13	15.93	23.55	8.27	4.65	28.46
	600 mm	10.33	20.89	28.8	20.39	30.64	10.76	6.05	37.1
	750 mm	12.74	25.75	35.5	24.83	37.78	13.26	7.46	45.73
	900 mm	15.13	30.59	42.17	29.28	44.88	15.75	8.86	54.37

Material		0.6 mm	1.2 mm	1.55 mm	1.2 mm	1.6 mm	0.6 mm	1.0 mm	2.0 mm
Straight Cover x 3 m Length	150 mm	2.93	5.93	8.17	8	8.7	3.05	1.72	9.99
	300 mm	5.01	10.12	13.96	13.32	14.85	5.21	2.93	18.07
	450 mm	7.08	14.32	19.74	18.65	21	7.37	4.15	25.56
	600 mm	9.16	18.51	25.52	23.96	27.16	9.53	5.36	33.05
	750 mm	11.23	22.7	31.3	29.3	33.31	11.69	6.58	40.54
	900 mm	13.3	26.9	37.09	34.61	39.46	13.85	7.79	48.03

E.&O.E.

Alpha Numeric Listing

CODE	SECT: PAGE
BT550	7:24
BT850	7:24
BT875	7:24
BT1060	7:24
BT1075	7:24
BT1275	7:24
BT6550	7:24
CHB	3:20
CKS0620	7:23
CKS0820	7:23
CPB7	2:05
CPB10	2:05
CPB15	2:05
CPB23	2:05
CPB30	2:05
CPB45	2:05
CPB60	2:05
CPC7	2:05
CPC10	2:05
CPC15	2:05
CPC23	2:05
CPC30	2:05
CPC45	2:05
CPC60	2:05
CPP7	2:05
CPP10	2:05
CPP15	2:05
CPP23	2:05
CPP30	2:05
CPP45	2:05
CPP60	2:05
CPRI7	2:05
CPRI10	2:05
CPRI15	2:05
CPRI23	2:05
CPRI30	2:05
CPRI45	2:05
CPRI60	2:05
CPRX7	2:05
CPRX10	2:05
CPRX15	2:05
CPRX23	2:05
CPRX30	2:05
CPRX45	2:05
CPRX60	2:05
CPS1040	7:23
CPS1240	7:23
CPS1250	7:23
CPT7	2:05
CPT10	2:05
CPT15	2:05
CPT23	2:05
CPT30	2:05
CPT45	2:05
CPT60	2:05
CPTT7	2:05
CPTT10	2:05
CPTT15	2:05
CPTT23	2:05
CPTT30	2:05
CPTT45	2:05
CPTT60	2:05

CODE	SECT: PAGE
CSKH10	7:24
CSKH12	7:24
CTB7	2:11
CTB10	2:11
CTB15	2:11
CTB23	2:11
CTB30	2:11
CTB45	2:11
CTB60	2:11
CTC7	2:11
CTC10	2:11
CTC15	2:11
CTC23	2:11
CTC30	2:11
CTC45	2:11
CTC60	2:11
CTD	2:10
CTFC7	2:10
CTFC10	2:10
CTFC15	2:10
CTFC23	2:10
CTFC30	2:10
CTFC45	2:10
CTFC60	2:10
CTSBUSH	2:10
CTSPAD	2:10
CTST	2:10
CTP	2:10
CTLRW1 x W2	2:11
CTRRW1 x W2	2:11
CTSRW1 x W2	2:11
CTT7	2:10
CTT10	2:10
CTT15	2:10
CTT23	2:10
CTT30	2:10
CTT45	2:10
CTT60	2:10
CTTT7	2:11
CTTT10	2:11
CTTT15	2:11
CTTT23	2:11
CTTT30	2:11
CTTT45	2:11
CTTT60	2:11
CTVP	2:11
DB0840	7:23
DB1040	7:23
DB1050	7:23
DB1075	7:23
DB1260	7:23
DB12100	7:23
DIM06	7:23
DIM08	7:23
DIM10	7:23
DIM12	7:23
DIM16	7:23
FW06	7:23
FW08	7:23
FW10	7:23
FW12	7:23
FW16	7:23

CODE	SECT: PAGE
HDCBN10	3:19
HDCBN12	3:19
HDCC10	3:19
HDCC12	3:19
HDCS	3:19
HHS0620	7:23
HHS0625	7:23
HHS0820	7:23
HHS0825	7:23
HHS0830	7:23
HHS1020	7:23
HHS1025	7:23
HHS1030	7:23
HHS1040	7:23
HHS1225	7:23
HHS1230	7:23
HHS1240	7:23
HHS1260	7:23
HHS1265	7:23
HHS1640	7:23
HN06	7:23
HN08	7:23
HN10	7:23
HN12	7:23
HN16	7:23
K1000	7:03
K1000CI	7:08
K1000T	7:03
K1001	7:03
K1006	7:22
K1007	7:22
K1008	7:22
K1010	7:22
K1012	7:22
K1026	7:15
K1031	7:16
K1033	7:15
K1036	7:16
K1037	7:15
K1038	7:15
K1044	7:16
K1045	7:16
K1046	7:16
K1047	7:16
K1062	7:16
K1063	7:16
K1064	7:16
K1065	7:16
K1066	7:16
K1067	7:16
K1068	7:15
K1075	7:10
K1075A	7:10
K1184	7:18
K1186	7:14
K1200A-10	7:13
K1200B-10	7:13
K1200C-10	7:13
K1200D-10	7:23
K1220	7:18
K1221	7:18
K1222	7:18

CODE	SECT: PAGE
K1271	7:12
K1272	7:12
K1272A	7:12
K1273	7:13
K1325	7:15
K1326	7:15
K1354Z	7:14
K1357	7:15
K1358	7:16
K1359	7:15
K1376	7:16
K1377	7:16
K1386	7:12
K1458	7:15
K1474	7:15
K1546	7:14
K1600-34	7:11
K1600-43	7:11
K1600-48	7:11
K1600-60	7:11
K1600-76	7:11
K1600-89	7:11
K1600-102	7:11
K1600-114	7:11
K1600-152	7:11
K1600-165	7:11
K1663	7:08
K1727	7:15
K1736	7:16
K1796	7:12
K1796A	7:12
K1834	7:14
K1834A	7:14
K1941	7:16
K1953	7:16
K1964	7:16
K2000	7:04
K2000T	7:04
K2001	7:04
K2072-S1	7:15
K2072A	7:15
K2073	7:15
K2095	7:14
K2097	7:14
K2101	7:14
K2103	7:14
K2106	7:14
K2108	7:14
K2223	7:17
K2224	7:17
K2228	7:17
K2235	7:15
K2240	7:18
K2335	7:17
K2346	7:17
K2378	7:22
K2379	7:22
K2380	7:22
K2381	7:22
K2452	7:14
K2484	7:15
K2491	7:10

E.&O.E.

Alpha Numeric Listing

CODE	SECT: PAGE
K2492	7:10
K2493	7:10
K2494	7:10
K2495	7:10
K2497	7:10
K2500	7:10
K2513F	7:10
K2514B	7:10
K2514F	7:10
K2515B	7:10
K2515F	7:10
K2516B	7:10
K2516F	7:10
K2517B	7:10
K2517F	7:10
K2521-75	7:17
K2521-100	7:17
K2535-75	7:17
K2539	7:17
K2542	7:10
K2543	7:10
K2544	7:10
K2545	7:10
K2546	7:10
K2552	7:18
K2749	7:14
K2750	7:14
K2755	7:17
K2785	7:12
K2786	7:12
K2855	7:17
K2950	7:14
K3006	7:22
K3007	7:22
K3008	7:22
K3010	7:22
K3012	7:22
K3016	7:22
K3087	7:12
K3088	7:12
K3116	7:22
K3300	7:05
K3300CI	7:08
K3300T	7:05
K3301	7:05
K3676	7:12
K367910Z	7:12
K367912Z	7:12
K3683	7:12
K4000	7:06
K4000T	7:06
K4001	7:06
K4006	7:22
K4007	7:22
K4008	7:22
K4010	7:22
K4045	7:16
K4047	7:16
K4240	7:18
K4663	7:08
K5-8	7:11
K5-10	7:11

CODE	SECT: PAGE
K5-12	7:11
K5-16	7:11
K5-18	7:11
K5-20	7:11
K5-21	7:11
K5-22	7:11
K5-25	7:11
K5-27	7:11
K5-29	7:11
K5-32	7:11
K5-34	7:11
K5-35	7:11
K5-38	7:11
K5-42	7:11
K5-43	7:11
K5-44	7:11
K5-48	7:11
K5-49	7:11
K5-51	7:11
K5-54	7:11
K5-57	7:11
K5-60	7:11
K5-64	7:11
K5-67	7:11
K5-70	7:11
K5-76	7:11
K5-79	7:11
K5-83	7:11
K5-86	7:11
K5-89	7:11
K5-92	7:11
K5-95	7:11
K5-98	7:11
K5-102	7:11
K5-105	7:11
K5-108	7:11
K5-111	7:11
K5-114	7:11
K5-117	7:11
K5-121	7:11
K5-127	7:11
K5-133	7:11
K5-139	7:11
K5-146	7:11
K5-152	7:11
K5-159	7:11
K5-165	7:11
K5-178	7:11
K5-191	7:11
K5-203	7:11
K5-219	7:11
K5-230	7:11
K5-241	7:11
K5-254	7:11
K5-305	7:11
K5-315	7:11
K5-324	7:11
K5026-1	7:11
K5028-1	7:11
K5030-1	7:11
K5032-1	7:11
K5034-1	7:11

CODE	SECT: PAGE
K5036-1	7:11
K5038-1	7:11
K5040-1	7:11
K5042-1	7:11
K5044-1	7:11
K5046-1	7:11
K5500	7:07
K5500T	7:07
K5501	7:07
K5508	7:22
K5510	7:22
K5540	7:18
K5547	7:16
K992	7:18
KA506	7:21
KA756	7:21
KAC19	7:19
KAC25	7:19
KAC31	7:19
KAC42	7:19
KAC48	7:19
KAPT7	2:03
KAPT10	2:03
KAPT15	2:03
KAPT23	2:03
KAPT30	2:03
KAPT45	2:03
KAPT60	2:03
KAPTB7	2:03
KAPTB10	2:03
KAPTB15	2:03
KAPTB23	2:03
KAPTB30	2:03
KAPTB45	2:03
KAPTB60	2:03
KAPTC7	2:03
KAPTC10	2:03
KAPTC15	2:03
KAPTC23	2:03
KAPTC30	2:03
KAPTC45	2:03
KAPTC60	2:03
KAPTRI7	2:03
KAPTRI10	2:03
KAPTRI15	2:03
KAPTRI23	2:03
KAPTRI30	2:03
KAPTRI45	2:03
KAPTRI60	2:03
KAPTRX7	2:03
KAPTRX10	2:03
KAPTRX15	2:03
KAPTRX23	2:03
KAPTRX30	2:03
KAPTRX45	2:03
KAPTRX60	2:03
KAPTT7	2:03
KAPTT10	2:03
KAPTT15	2:03
KAPTT23	2:03
KAPTT30	2:03
KAPTT45	2:03

CODE	SECT: PAGE
KAPTT60	2:03
KBC08	7:12
KBC10	7:12
KBC12	7:12
KC06	7:23
KC08	7:23
KC10	7:23
KC12	7:23
KC16	7:23
KC74	7:21
KC105	7:21
KC157	7:21
KCC17	7:19
KCC36	7:19
KCC45	7:19
KDBS55	1:05
KDBS77	1:05
KDBS105	1:05
KDBS1010	1:05
KDBS1510	1:05
KDBS1515	1:05
KDC55	1:03
KDC77	1:03
KDC105	1:03
KDC1010	1:03
KDC1510	1:03
KDC1515	1:03
KDD	1:03
KDE55	1:03
KDE77	1:03
KDE105	1:03
KDE1010	1:03
KDE1510	1:03
KDE1515	1:03
KDF55	1:03
KDF77	1:03
KDF105	1:03
KDF1010	1:03
KDF1510	1:03
KDF1515	1:03
KDP55	1:03
KDP77	1:03
KDP105	1:03
KDP1010	1:03
KDP1510	1:03
KDP1515	1:03
KDRS105	1:05
KDRS1510	1:05
KDS55	1:03
KDS77	1:03
KDS105	1:03
KDS1010	1:03
KDS1510	1:03
KDS1515	1:03
KDSRSD1XD2	1:05
KDTS55	1:04
KDTS77	1:04
KDTS105	1:04
KDTS1010	1:04
KDTS1510	1:04
KDTS1515	1:04
KDXS55	1:04

E.&O.E.

CODE	SECT: PAGE
KDXS77	1:04
KDXS105	1:04
KDXS1010	1:04
KDXS1510	1:04
KDXS1515	1:04
KF506	7:21
KF756	7:21
KF1006	7:21
KF1506	7:21
KHTS15	2:19
KHTS30	2:19
KHTS45	2:19
KHTS60	2:19
KLTS15	2:19
KLTS30	2:19
KLTS45	2:19
KLTS60	2:19
KM10510	2:25
KM10515	2:25
KM10530	2:25
KM10545	2:25
KM10560	2:25
KM5410	2:24
KM5415	2:24
KM5430	2:24
KM5440	2:24
KM5450	2:24
KM5460	2:24
KMA06	2:26
KMA0910	2:27
KMA0915	2:27
KMA0930	2:27
KMA0940	2:27
KMA0950	2:27
KMA0960	2:27
KMA1410	2:27
KMA1415	2:27
KMA1430	2:27
KMA1440	2:27
KMA1450	2:27
KMA1460	2:27
KMA19	2:27
KMDXBA	2:28
KMDXBZ	2:28
KMLO5A	2:28
KML01A	2:26
KML03	2:26
KML06	2:26
KML10	2:26
KMLDA	2:27
KPC08	7:13
KPC10	7:13
KPC12	7:13
KPM32	1:06
KPM38	1:06
KPM50	1:06
KPM75	1:06
KPM100	1:06
KR06	7:23
KR08	7:23
KR10	7:23
KR12	7:23

CODE	SECT: PAGE
KR16	7:23
KRC06	7:19
KRC08	7:19
KRC10	7:19
KSA25	7:20
KSA40	7:20
KSA50	7:20
KSC25	7:20
KSF40	7:20
KSM25	1:06
KSM32	1:06
KSM38	1:06
KSM50	1:06
KSM75	1:06
KSM100	1:06
KSZ25	7:20
KT215	2:13
KT230	2:13
KT245	2:13
KT260	2:13
KT2BS	2:22
KT2HDC	2:22
KT2LP	2:22
KT2RP	2:22
KT2SP	2:22
KT2TX	5:16
KT2FC15	2:16
KT2FC30	2:16
KT2FC45	2:16
KT2FC60	2:16
KT2PC15	2:16
KT2PC30	2:16
KT2PC45	2:16
KT2PC60	2:16
KT315	2:17
KT330	2:17
KT345	2:17
KT360	2:17
KT3BS	2:22
KT3HDC	2:22
KT3LP	2:22
KT3RP	2:22
KT3SP	2:22
KT3TX	2:22
KT515	2:18
KT530	2:18
KT545	2:18
KT560	2:18
KT5BS	2:22
KT5HDC	2:22
KT5LP	2:22
KT5RP	2:22
KT5SP	2:22
KT5TX	2:22
KTB	2:22
KTN	2:22
KTFC15	2:19
KTFC30	2:19
KTFC45	2:19
KTFC60	2:19
KTH75	7:20
KTH100	7:20

CODE	SECT: PAGE
KTH150	7:20
KTH230	7:20
KTH300	7:20
KTH450	7:20
KTH600	7:20
KHTS15	2:19
KHTS30	2:19
KHTS45	2:19
KHTS60	2:19
KLTS15	2:19
KLTS30	2:19
KLTS45	2:19
KLTS60	2:19
KTPC15	2:19
KTPC30	2:19
KTPC45	2:19
KTPC60	2:19
KWN06	7:13
KWN08	7:13
KWN10	7:13
KWN12	7:13
LB7	2:08
LB10	2:08
LB15	2:08
LB23	2:08
LB30	2:08
LB45	2:08
LB60	2:08
LC7	2:07
LC10	2:07
LC15	2:07
LC23	2:07
LC30	2:07
LC45	2:07
LC60	2:07
LDC7	2:07
LDC10	2:07
LDC15	2:07
LDC23	2:07
LDC30	2:07
LDC45	2:07
LDC60	2:07
LFC7	2:07
LFC10	2:07
LFC15	2:07
LFC23	2:07
LFC30	2:07
LFC45	2.:07
LFC60	2:07
LLRW1 x W2	2:08
LRRW1 x W2	2:08
LSRW1 x W2	2:08
LRI7	2:08
LRI10	2:08
LRI15	2:08
LRI23	2:08
LRI30	2:08
LRI45	2:08
LRI60	2:08
LRX7	2:08
LRX10	2:08
LRX15	2:08

CODE	SECT: PAGE
LRX23	2:08
LRX30	2:08
LRX45	2:08
LRX60	2:08
LDT7	2:07
LDT10	2:07
LDT15	2:07
LDT23	2:07
LDT30	2:07
LDT45	2:07
LDT60	2:07
LP7	2:07
LP10	2:07
LP15	2:07
LP23	2:07
LP30	2:07
LP45	2:07
LP60	2:07
LT7	2:07
LT10	2:07
LT15	2:07
LT23	2:07
LT30	2:07
LT45	2:07
LT60	2:07
PHS0620	7:23
PHS0625	7:23
PHS0825	7:23
SD-M8	7:24
SD-M10	7:24
SHDC02	3:19
SHDC03	3:19
SHM06	7:24
SHM08	7:24
SHM10	7:24
SHM12	7:24
SW06	7:23
SW08	7:23
SW10	7:23
SW12	7:23
SW16	7:23
VH6532-M08	7:24
VH6538-M10	7:24
VHM06	7:24
VHM08	7:24
VHM10	7:24
WHKH	7:24

E.&O.E.